Battery Management System (BMS) functions

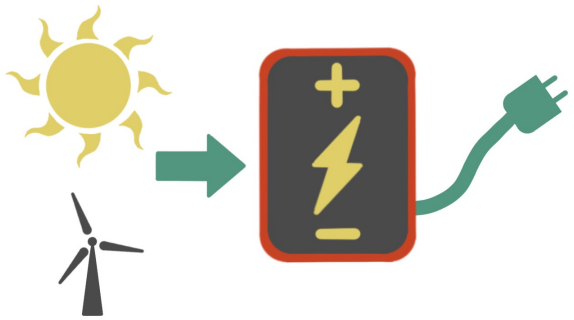

Ania's BMS Course

by Ania Mitros, PhD

© Ania Mitros, PhD, 2023

https://ofb.net/~ania/teaching/BMS-course/

Battery Management System (BMS) functions

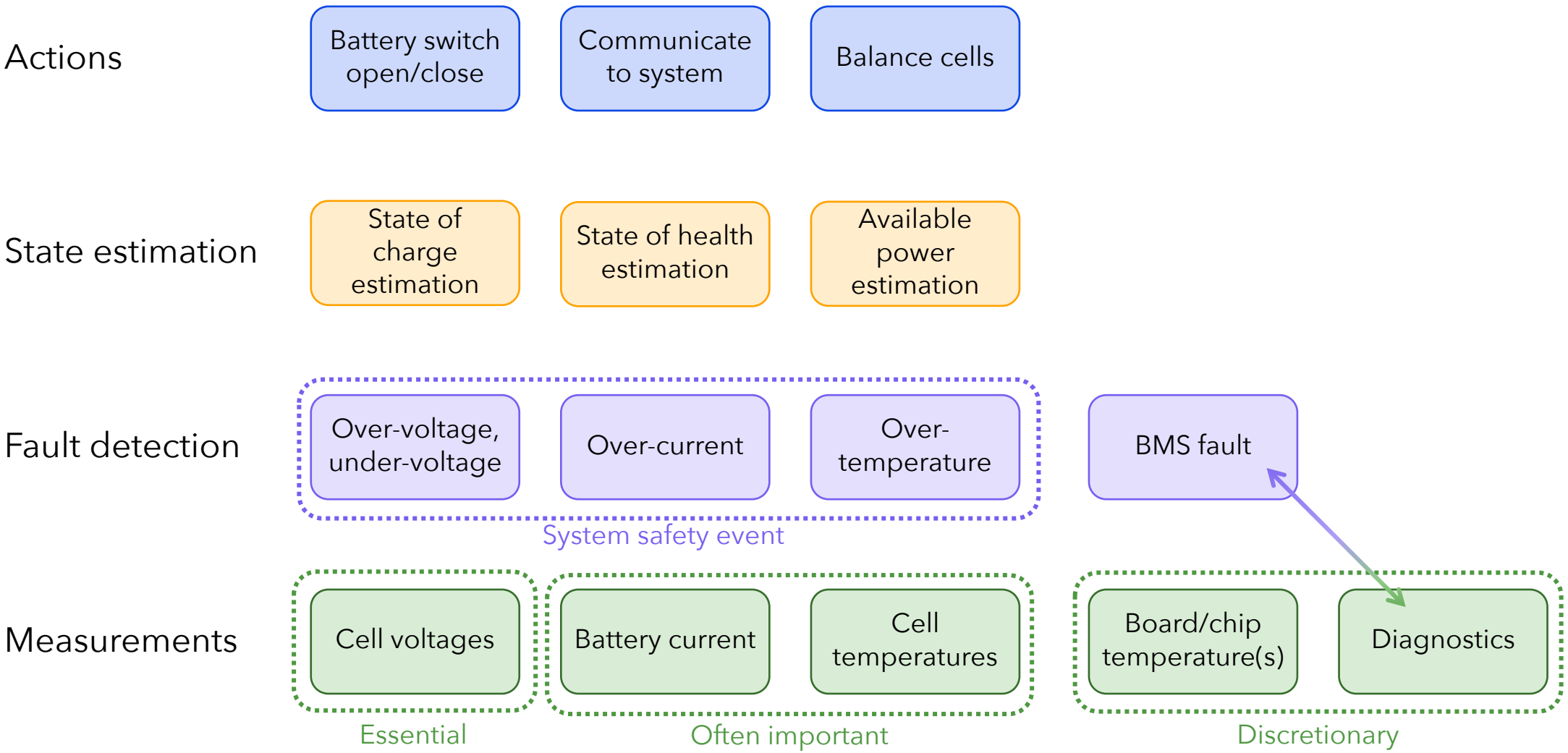

© Ania Mitros, PhD, 2023

https://ofb.net/~ania/teaching/BMS-course/

Battery Management System (BMS) functions

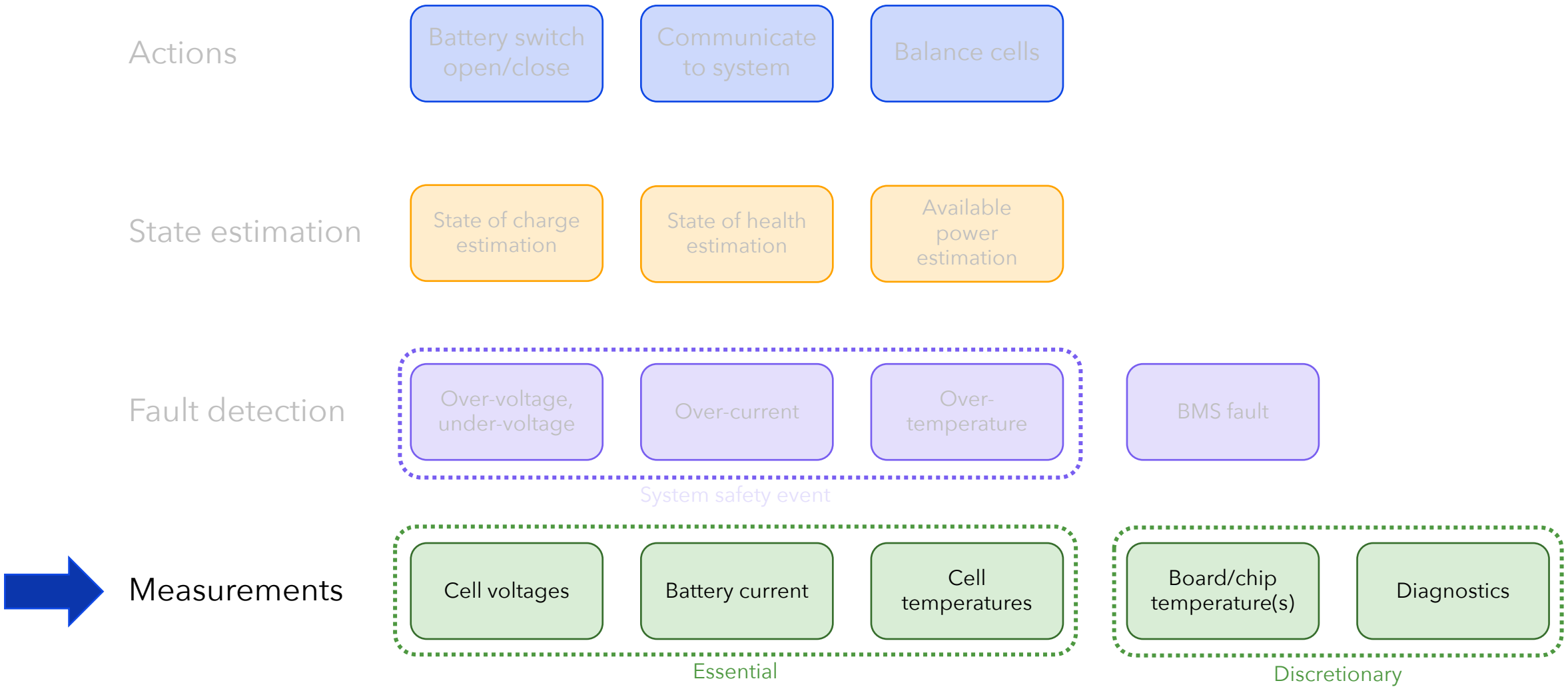

© Ania Mitros, PhD, 2023

https://ofb.net/~ania/teaching/BMS-course/

Essential Measurement functions

Pause & Think

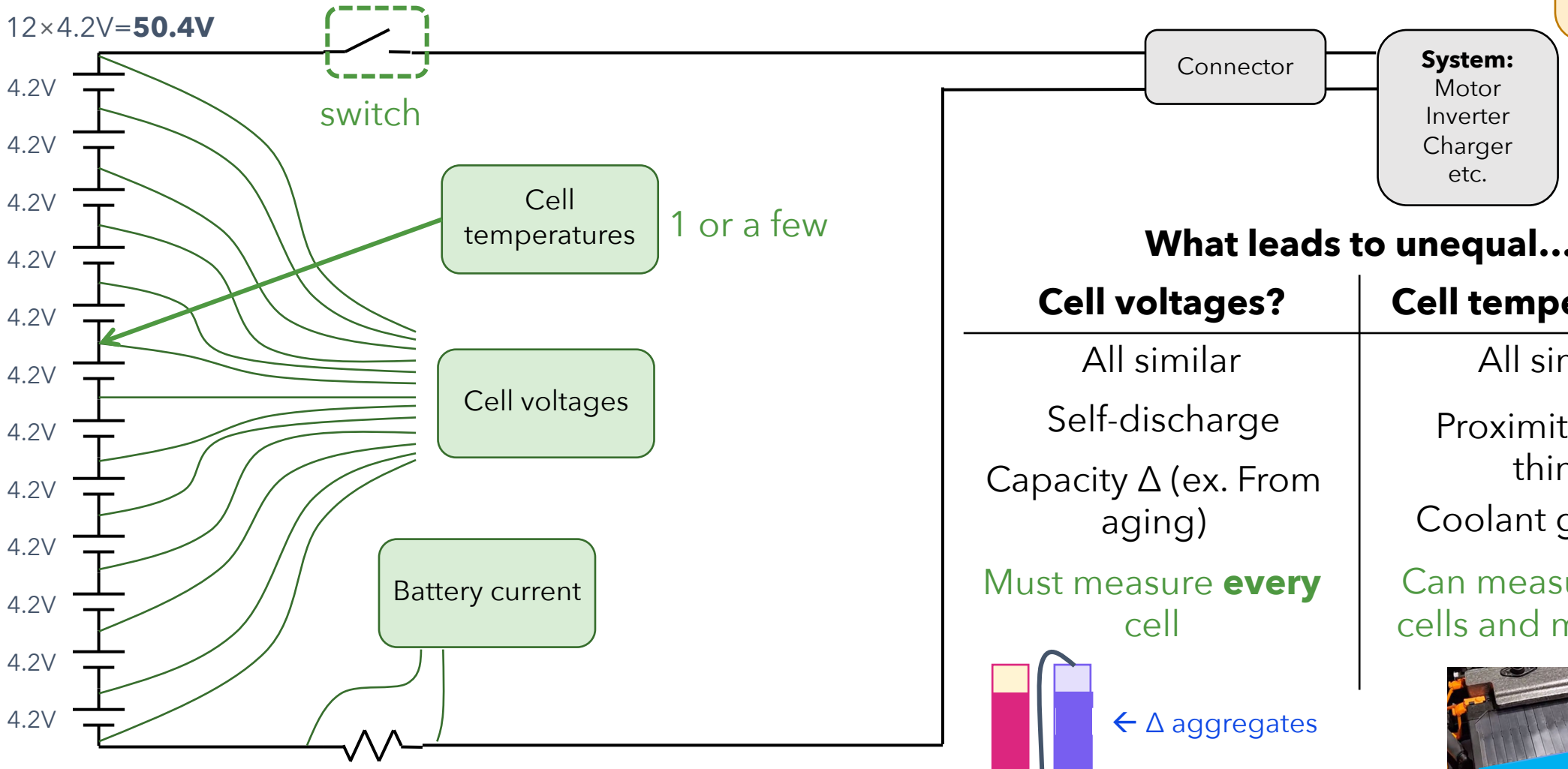

What leads to unequal…

Cell voltages?	**Cell temperatures?**
All similar	All similar
Self-discharge	Proximity to hot things
Capacity Δ (ex. From aging)	Coolant gradient
Must measure **every** cell	Can measure **some** cells and model rest

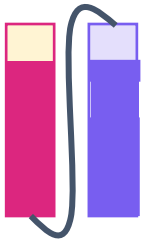

← Δ aggregates

Δ equalizes or reaches stady-state →

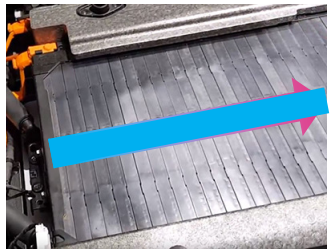

© Ania Mitros, PhD, 2023

Exothermic behavior

Pause & Think

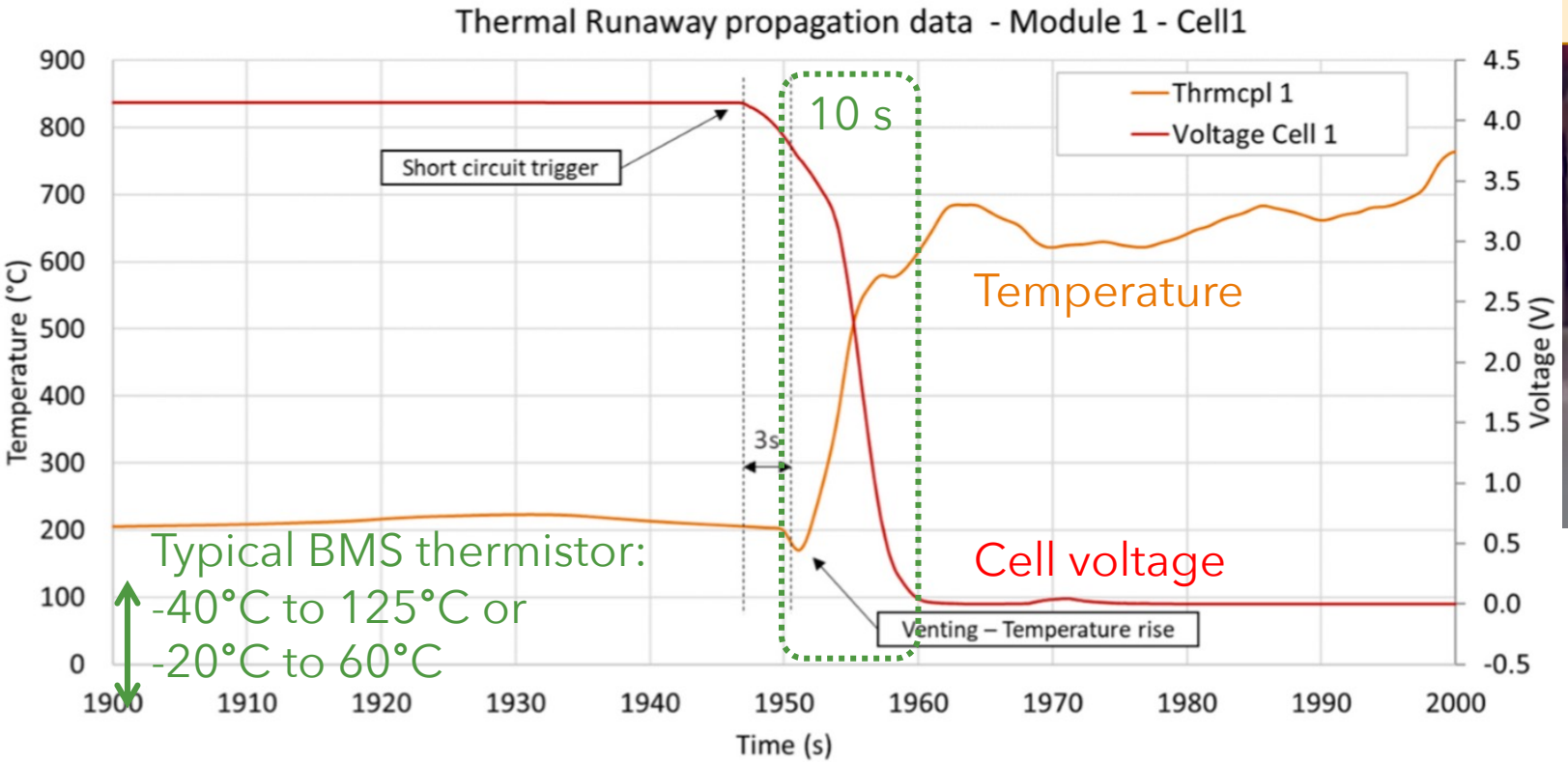

→ Voltage is adequate detection method

→ BMS cannot do much

Plot: https://doi.org/ 10.3390/batteries7030049

Bus video: https://www.youtube.com/watch?v=5r-yN8SugWM

© Ania Mitros, PhD, 2023

Measurement functions: Shunt selection

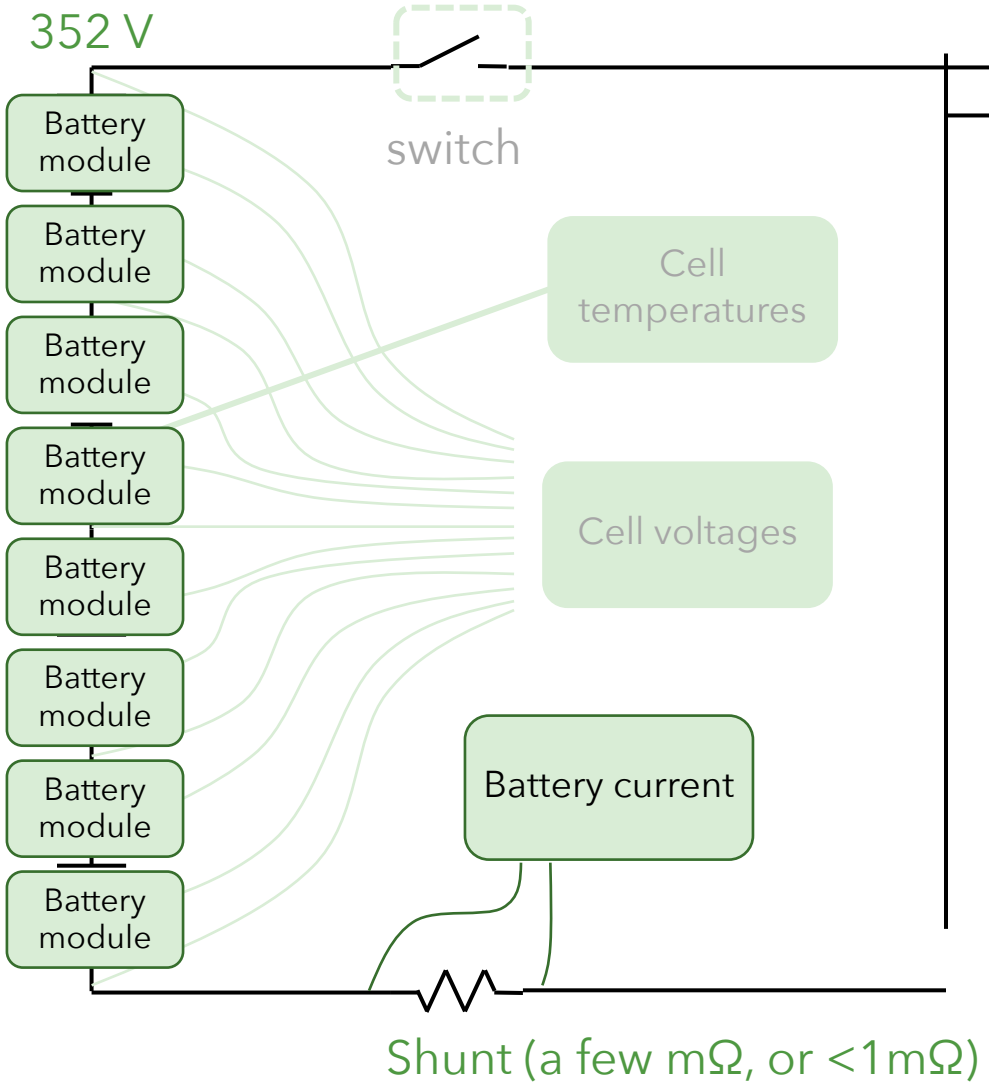

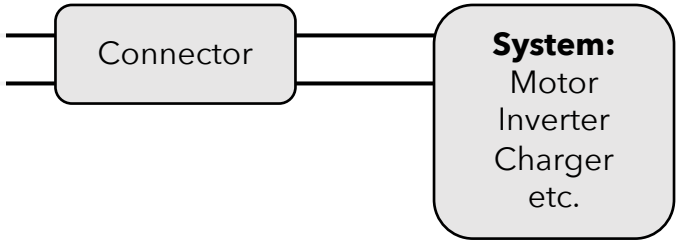

BMW i3:

- 1320 kg
- 0 to 62mph in 7.3 seconds
- 352V battery

power = $\frac{energy}{time}$ in Nm/s or Joules/s

kinetic energy = $\frac{1}{2}mv^2 = \frac{1}{2}(1320\ kg)\times\left(27.7\frac{m}{s}\right)^2$ = 506411 J

power =$(voltage)\times(current)$ in Watts or Joules/s

power = $\frac{energy}{time} = (voltage)\times(current)$

$$\frac{506{,}411\ J}{7.3\ s} = (352\ V)\times(current)$$

$$\text{current} = \frac{506{,}411\ J}{7.3\ s}\times\frac{1}{352\ V} = \boxed{197\ \text{A}}$$

Consider a 1mΩ shunt:

- V_{shunt} = I × R = (197 A) × (1mΩ) = 197 mV → measurable
- Power: V × I = (197 mV) × (197 A) = 38.8 W → high!

Consider a 0.1mΩ shunt:

- V_{shunt} = I × R = (197 A) × (0.1mΩ) = 19.7 mV → measurable
- Power: V × I = (19.7 mV) × (197 A) = 3.9 W → ok!

© Ania Mitros, PhD, 2023

Discretionary Measurement functions

Board/chip temperature(s)

Diagnostics

Discretionary

Board/chip temperature(s)

Diagnostics .

Discretionary

Diagnostics include:

- Balancing resistor temperature
- Chip temperature
- Connection to cells
- Self-diagnostics (ADC ok, voltage reference correct, memory test, etc)

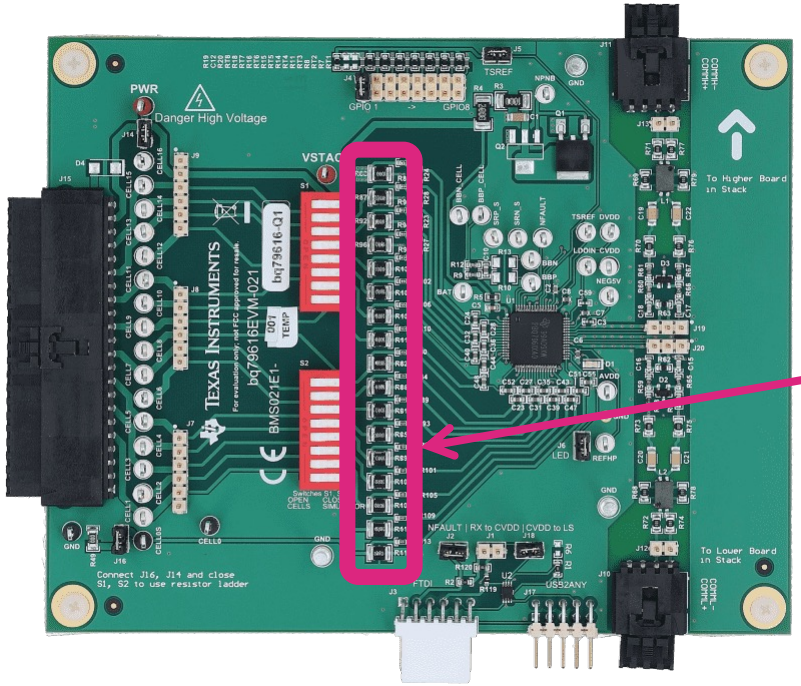

BQ79616 (from TI)

Cell balancing resistors

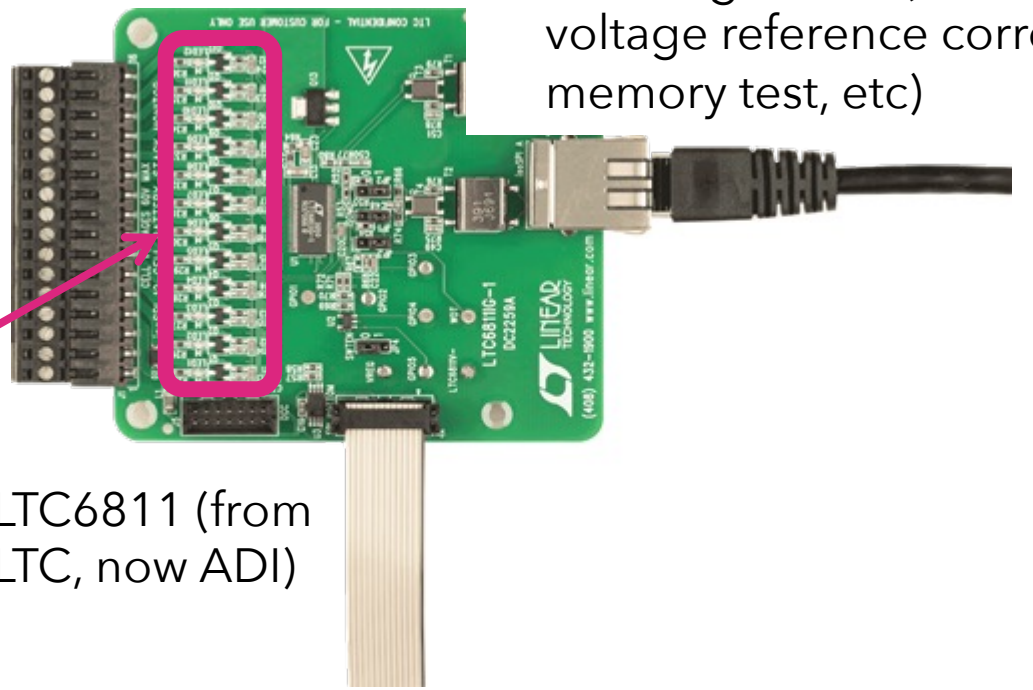

LTC6811 (from LTC, now ADI)

© Ania Mitros, PhD, 2023

Battery Management System (BMS) functions

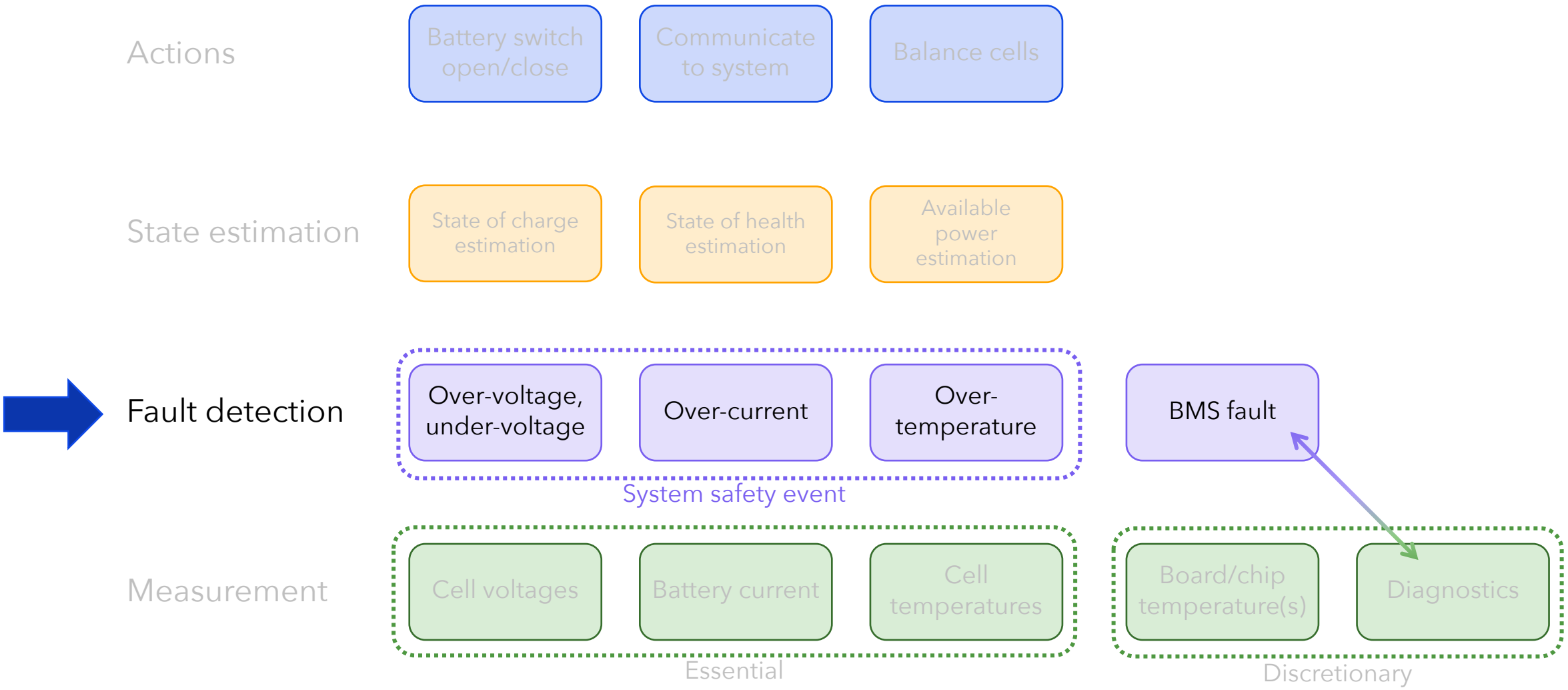

© Ania Mitros, PhD, 2023

https://ofb.net/~ania/teaching/BMS-course/

Fault detection

Over-voltage, under-voltage | Over-current | Over-temperature

System safety event

Risky in themselves

Not ok to continue in this state

Examples

Over-voltage	→ Permanent damage or aging → Exothermic reaction
Over-temperature	→ Permanent damage or aging → Exothermic reaction
Under-voltage	→ permanent damage
Over-current	→ Damage or fire possibly outside the battery

BMS fault

Fault inside the BMS

Running blind

Not unsafe in itself

Examples

Disconnected sense wire	→ Harmless in itself → Running blind
Bad data	→ Harmless in itself → Running blind
Balancing doesn't work	→ Cannot balance cells. Can operate safely for weeks.

© Ania Mitros, PhD, 2023

Battery Management System (BMS) functions

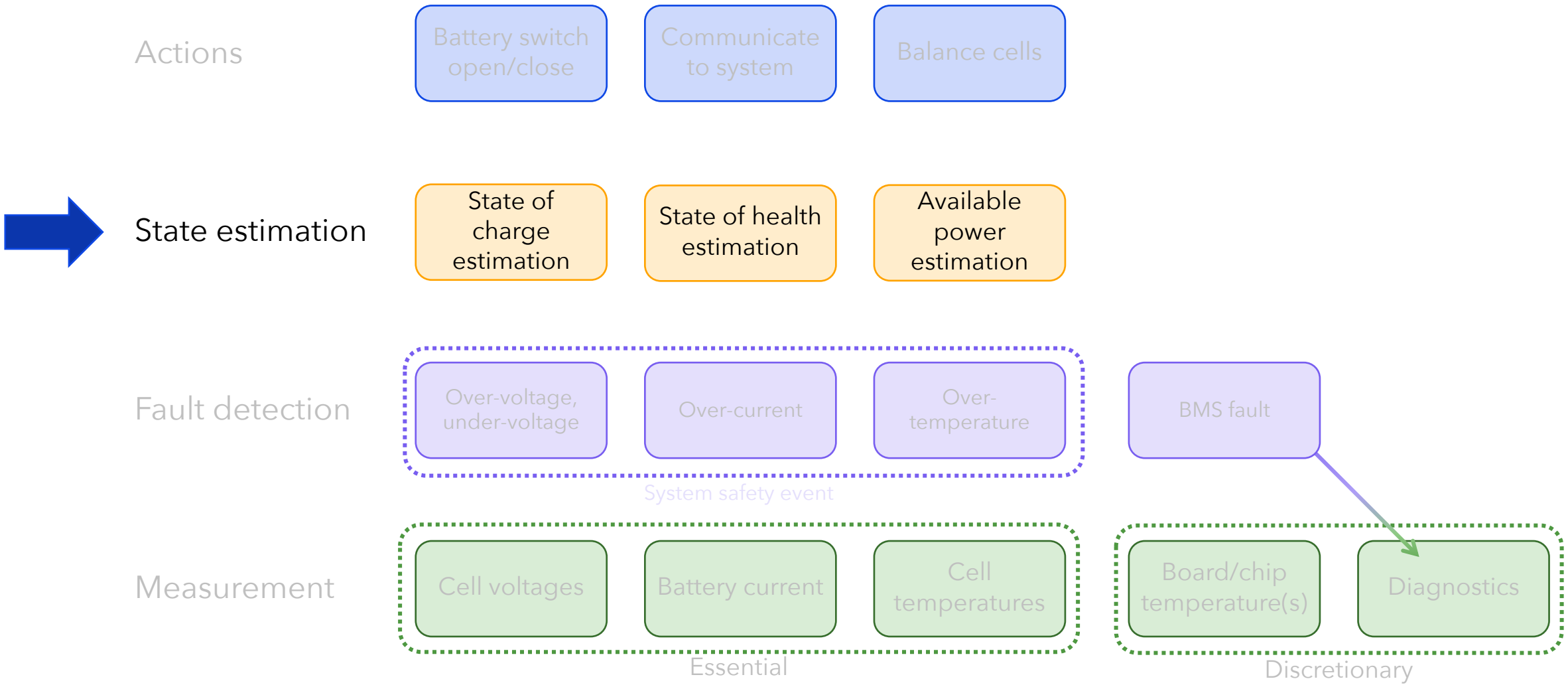

© Ania Mitros, PhD, 2023

https://ofb.net/~ania/teaching/BMS-course/

State of charge (SOC) estimation

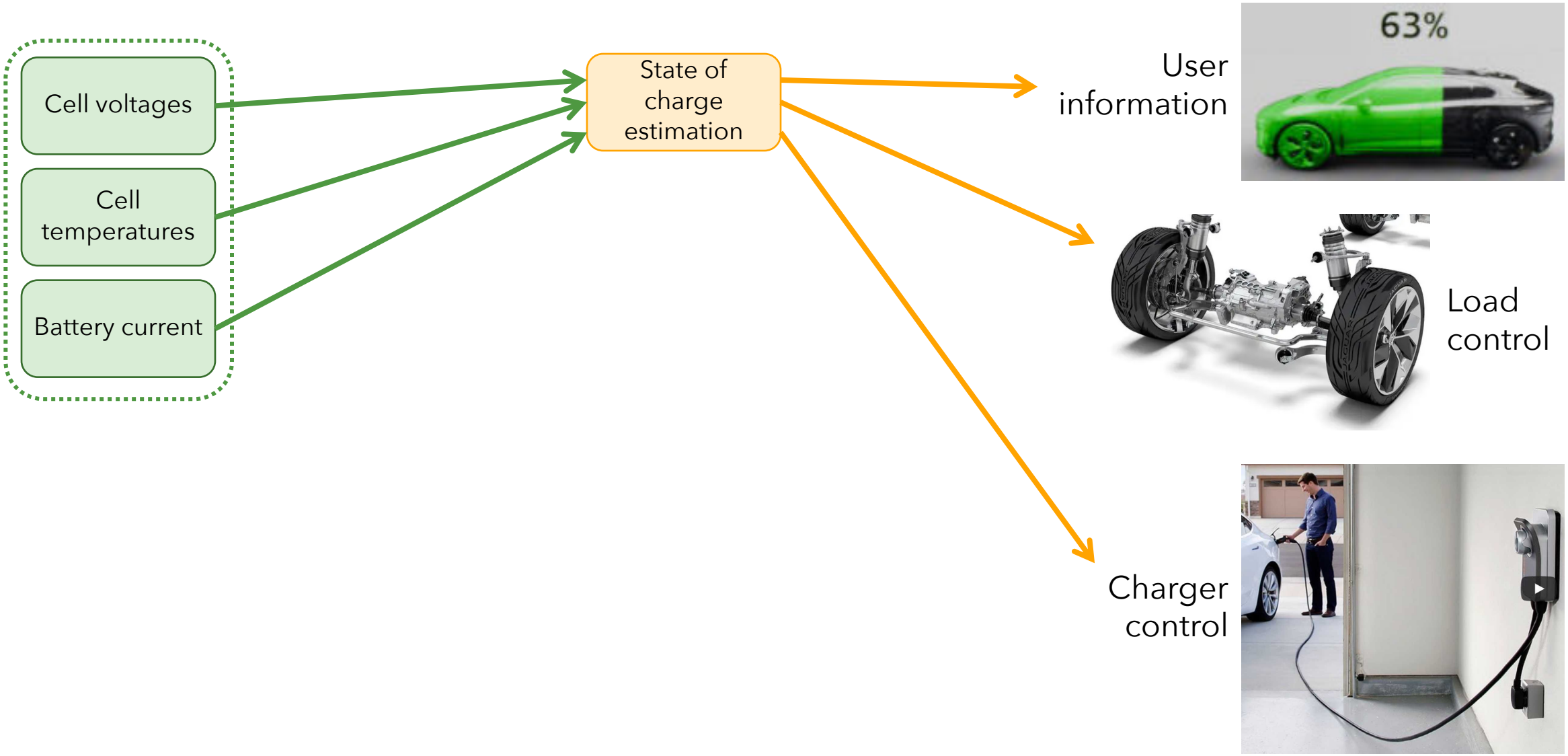

© Ania Mitros, PhD, 2023

State of charge (SOC) estimation: Lookup table

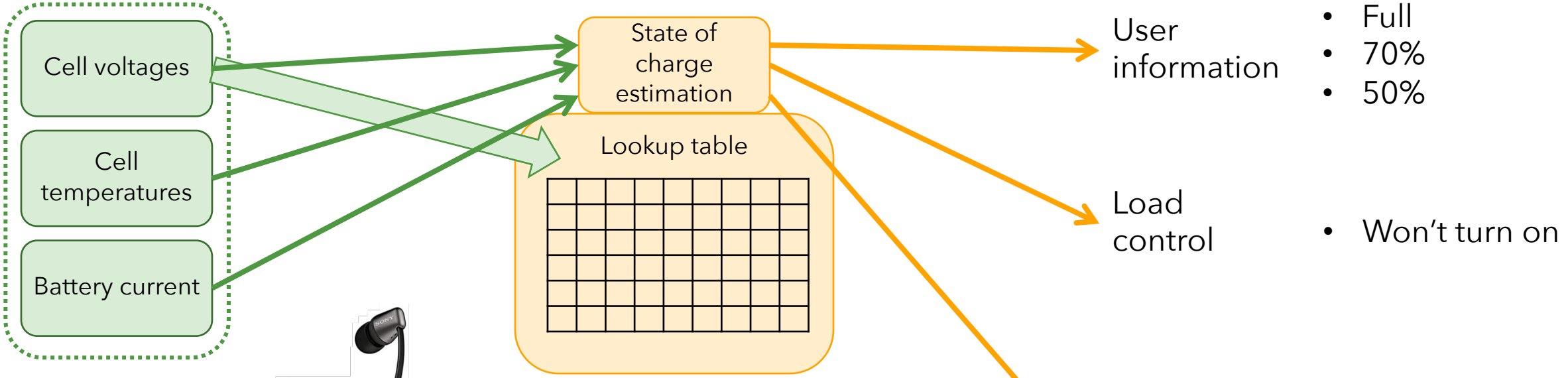

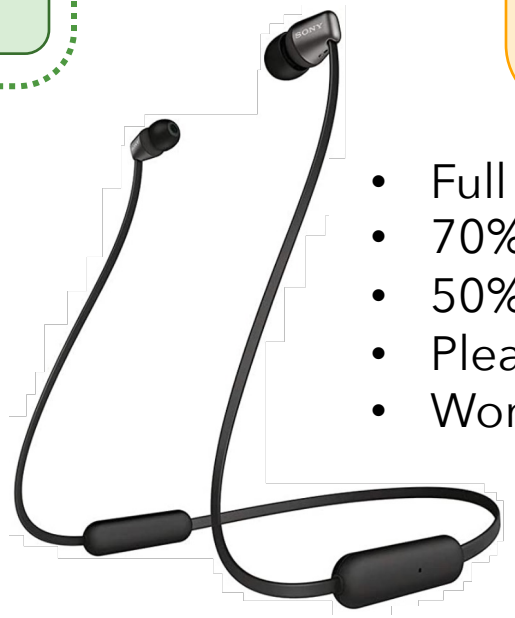

- Full
- 70%
- 50%
- Please charge
- Won't turn on

© Ania Mitros, PhD, 2023

State of charge (SOC) estimation: Cell model

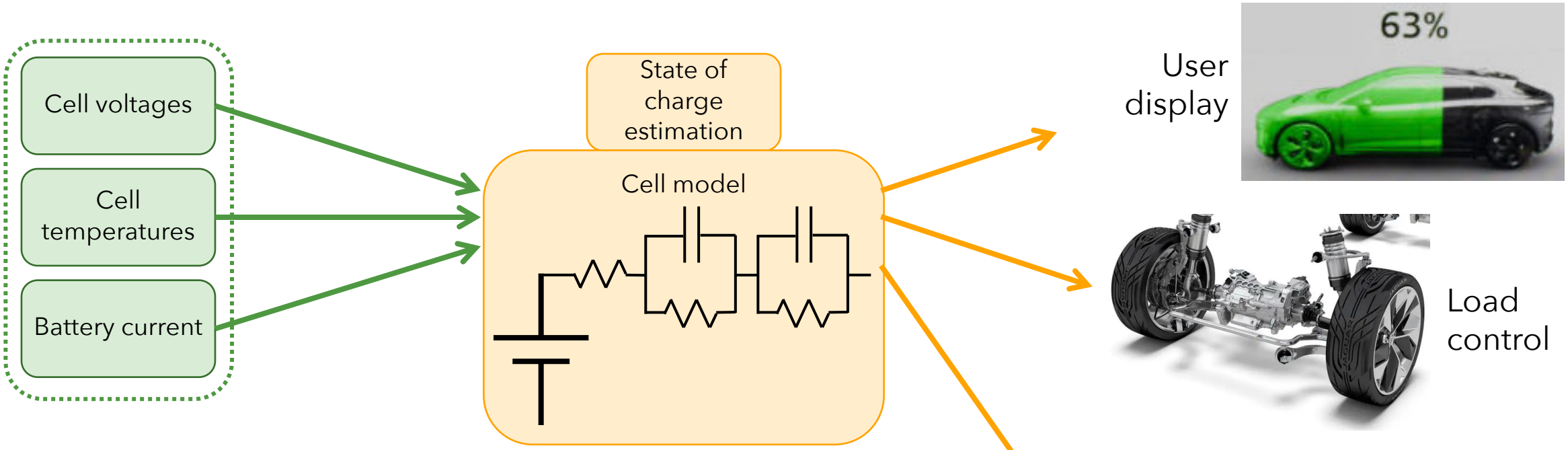

Vary temperature

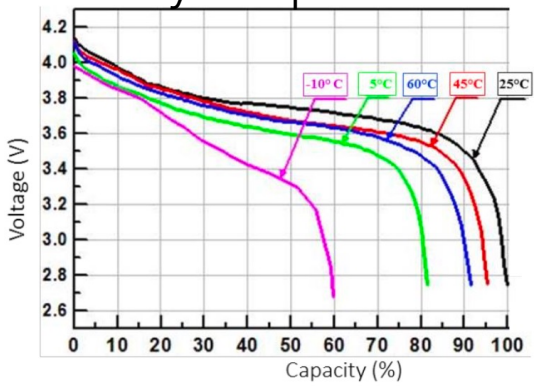

Vary current

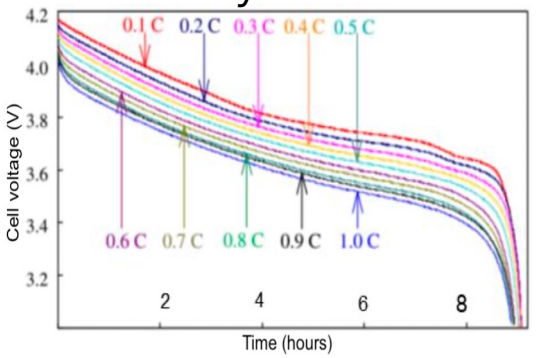

Curves from: https://arxiv.org/pdf/1803.10654

© Ania Mitros, PhD, 2023

https://ofb.net/~ania/teaching/BMS-course/

State of charge (SOC) estimation: Gist

Cell voltages

Cell temperatures

Battery current

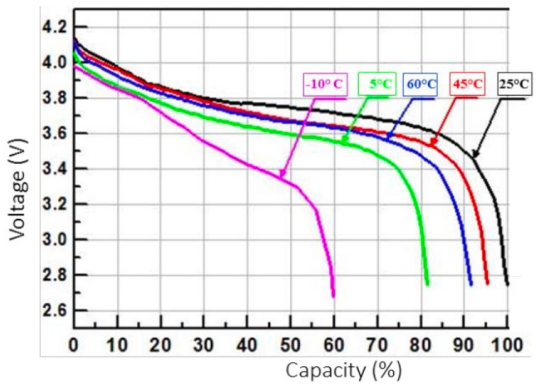

Curves from: https://arxiv.org/pdf/1803.10654

When rested:
Voltage approximates OCV
OCV → SOC

Sensor fusion

State of charge estimate

Coulomb counting

$$Q = \int I \cdot dt$$

When charging/discharging or soon after:
Sum measured current to estimate total charge added/removed.

Current flow → Voltage drop

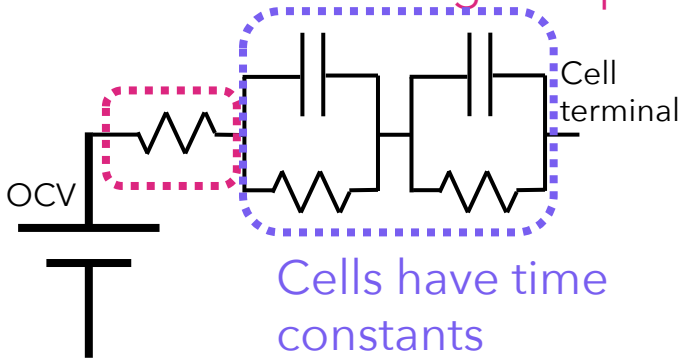

Cells have time constants

Coulomb counting error accumulates

$$Q_{est} = \int (I + I_{err}) \cdot dt = Q + \int I_{err} \cdot dt$$

10mA error example:
- After 1 hour: 10mAh error
- After 10 hours: 100mAh error
- After 100 hours: 1Ah error

© Ania Mitros, PhD, 2023

State of Health (SOH)

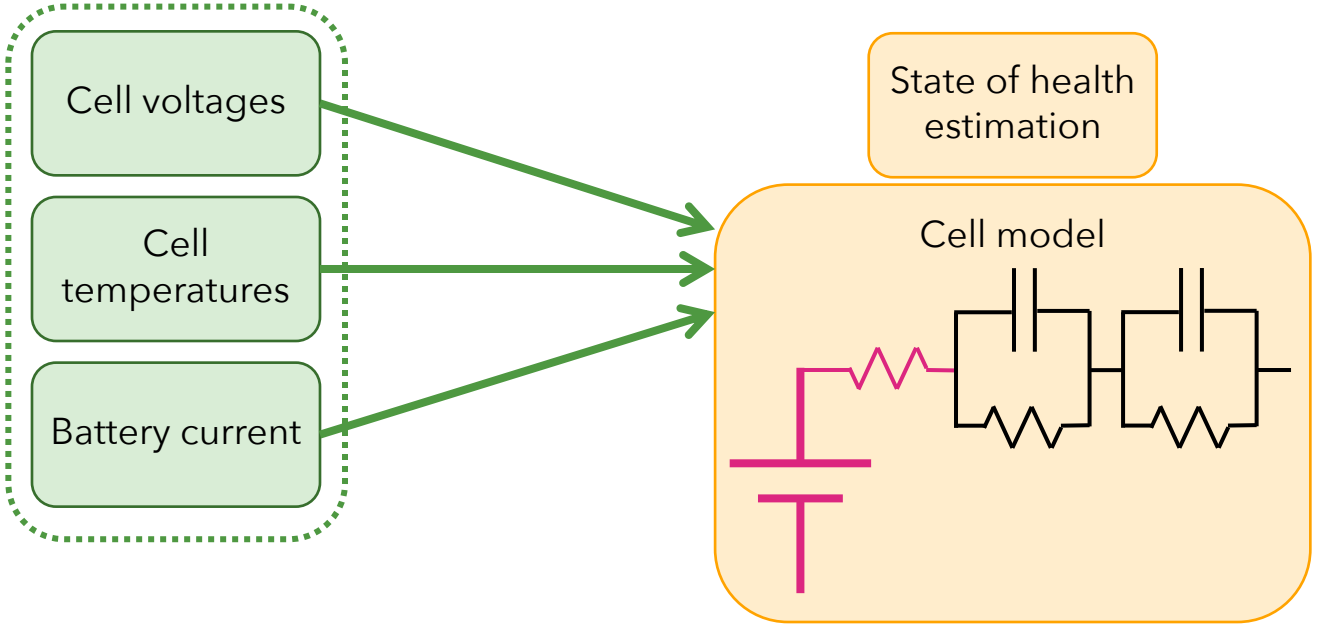

SOH is about adjusting cell model parameters to reflect aging.

Aging is due to: calendar time, high temperatures, and high currents.

Aging affects: Cell impedance, capacity

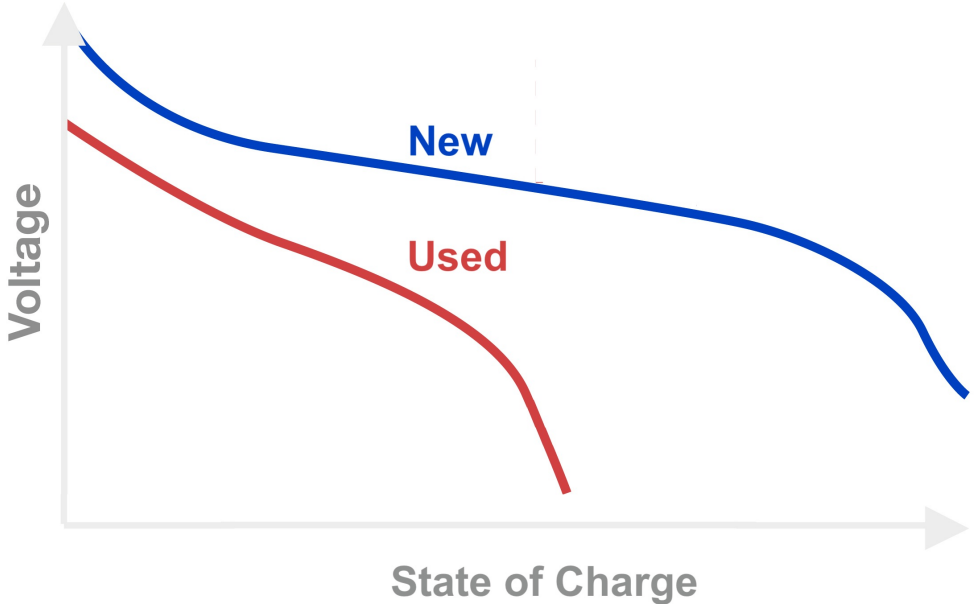

© Ania Mitros, PhD, 2023

Available power estimation

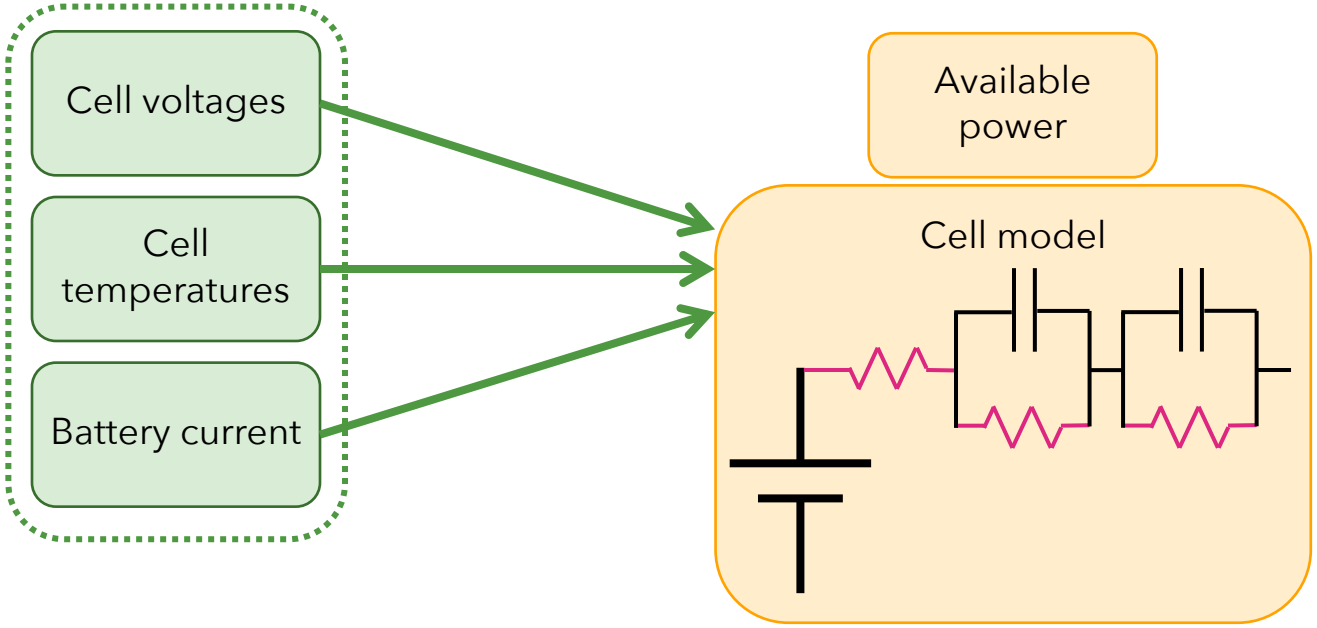

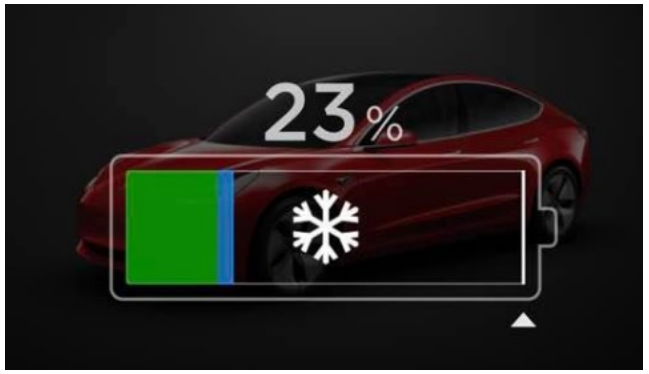

© Ania Mitros, PhD, 2023

Battery Management System (BMS) functions

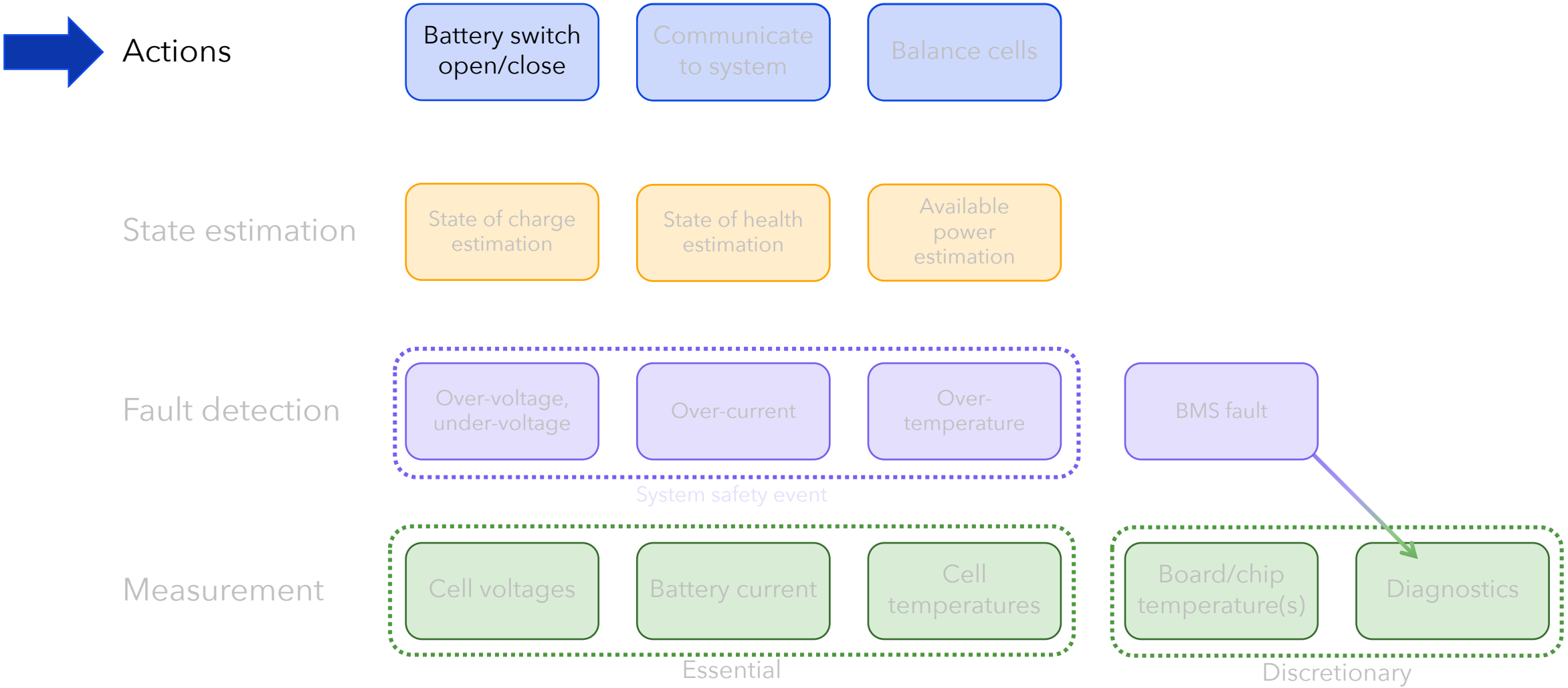

© Ania Mitros, PhD, 2023

https://ofb.net/~ania/teaching/BMS-course/

Battery switch: Why

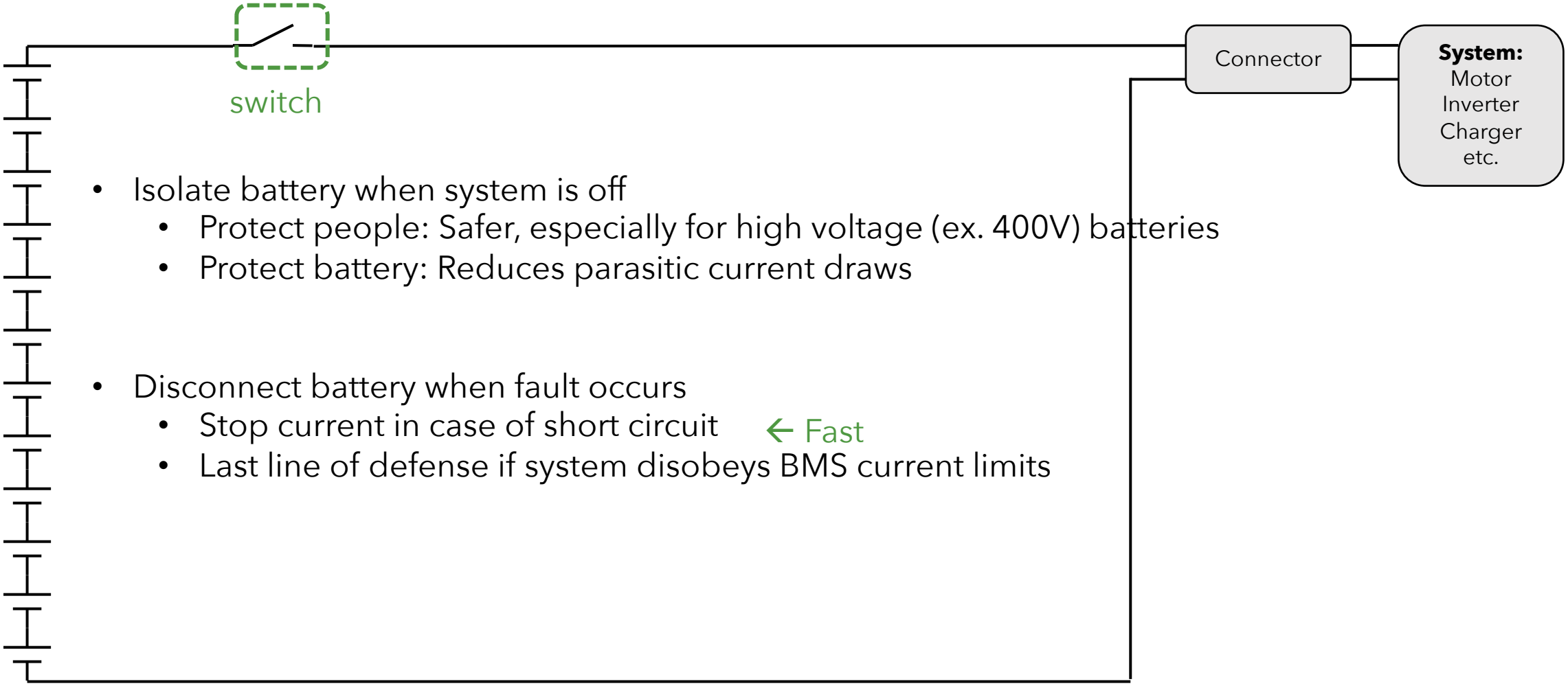

- Isolate battery when system is off
  - Protect people: Safer, especially for high voltage (ex. 400V) batteries
  - Protect battery: Reduces parasitic current draws

- Disconnect battery when fault occurs
  - Stop current in case of short circuit ← Fast
  - Last line of defense if system disobeys BMS current limits

© Ania Mitros, PhD, 2023

Battery switch: Why not

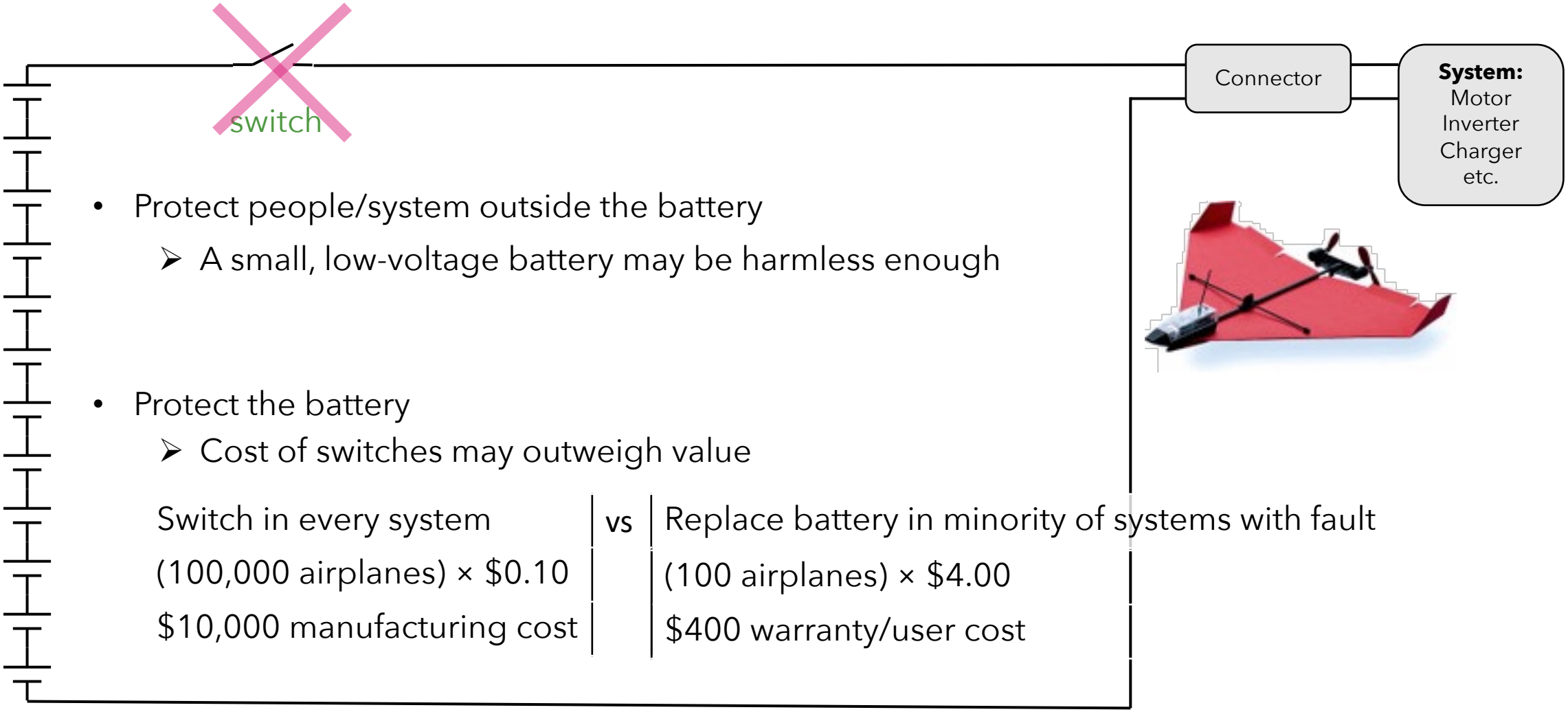

- Protect people/system outside the battery
  - A small, low-voltage battery may be harmless enough

- Protect the battery
  - Cost of switches may outweigh value

Switch in every system	vs	Replace battery in minority of systems with fault
(100,000 airplanes) × $0.10		(100 airplanes) × $4.00
$10,000 manufacturing cost		$400 warranty/user cost

© Ania Mitros, PhD, 2023

Battery switch: Device choice

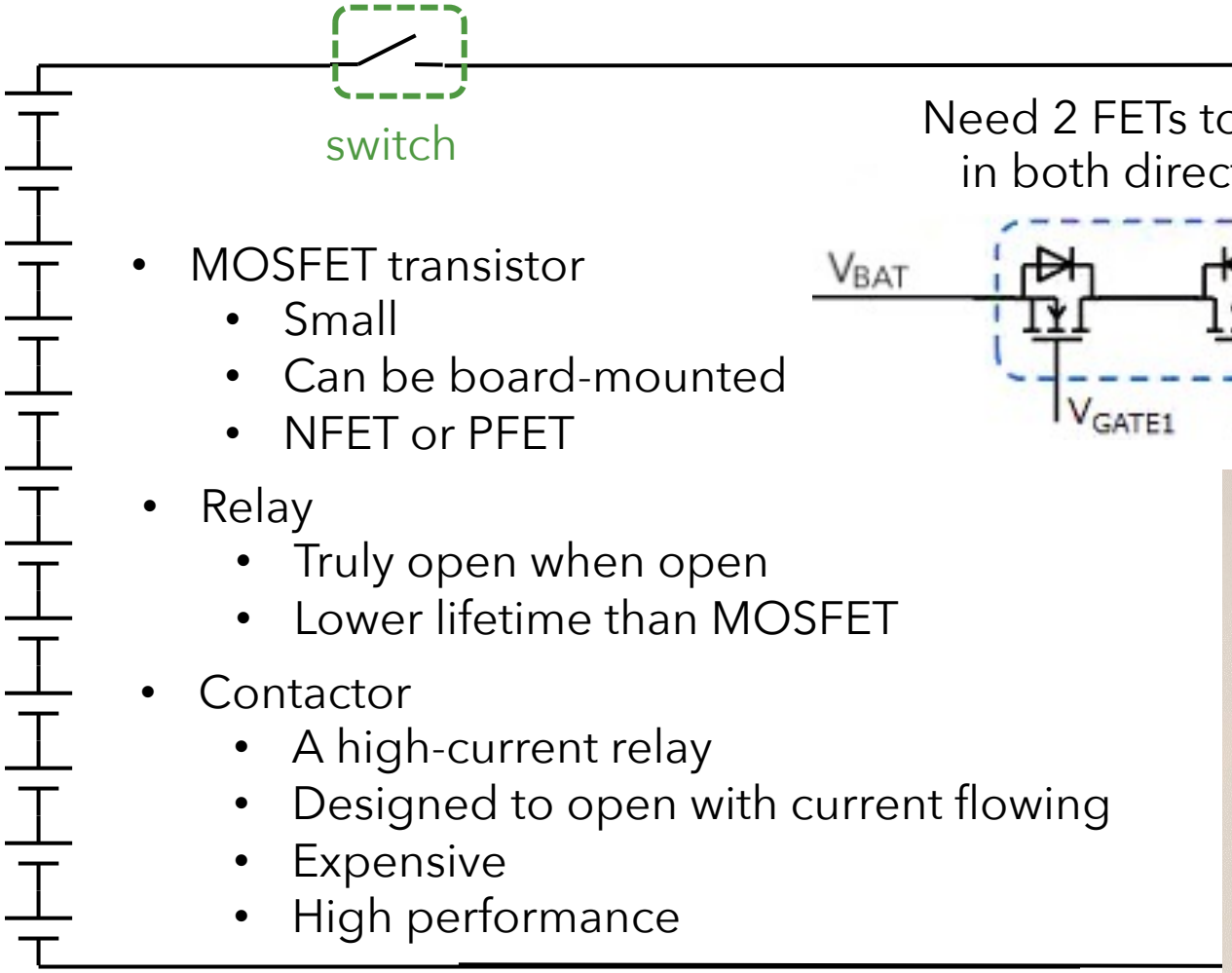

- MOSFET transistor
  - Small
  - Can be board-mounted
  - NFET or PFET
- Relay
  - Truly open when open
  - Lower lifetime than MOSFET
- Contactor
  - A high-current relay
  - Designed to open with current flowing
  - Expensive
  - High performance

Need 2 FETs to block in both directions

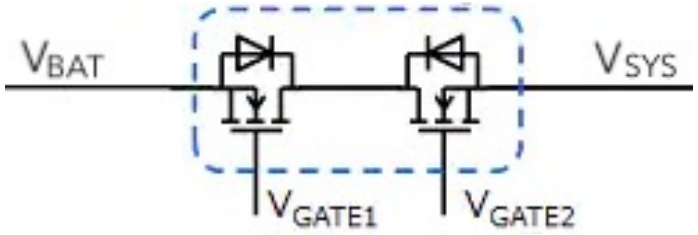

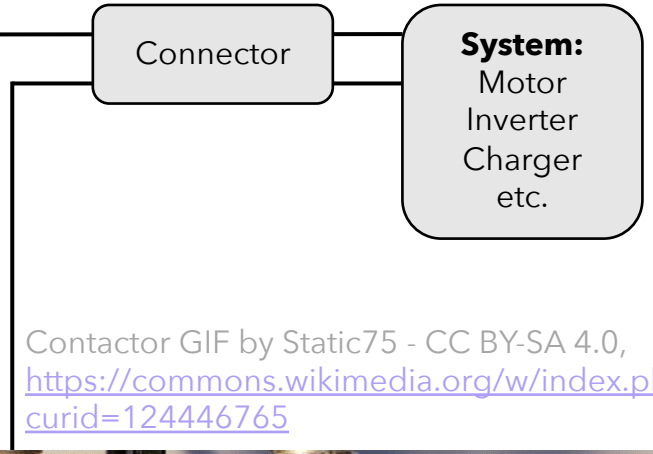

Contactor GIF by Static75 - CC BY-SA 4.0, https://commons.wikimedia.org/w/index.php?curid=124446765

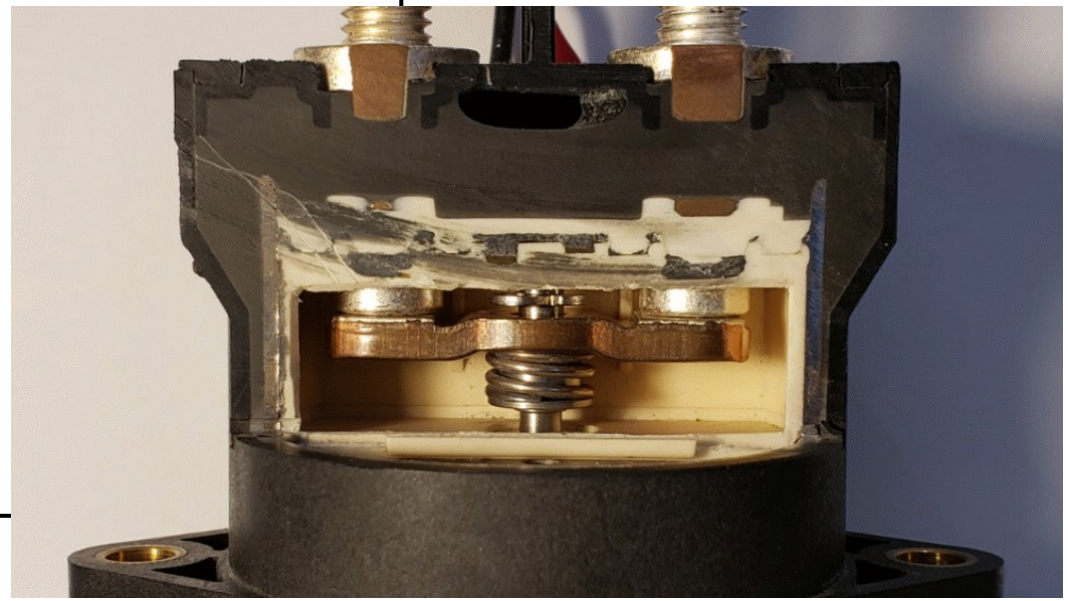

© Ania Mitros, PhD, 2023

Back-to-back MOSFETs

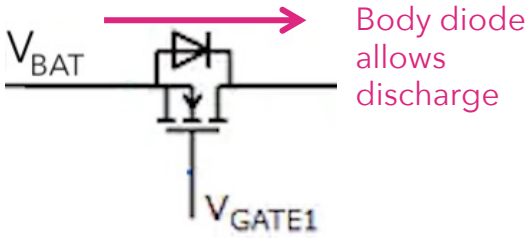

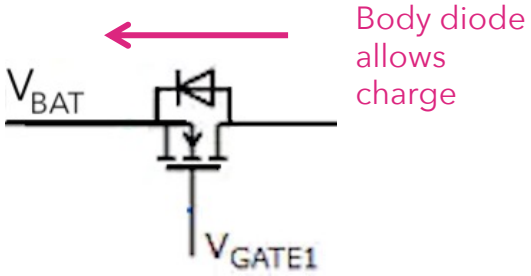

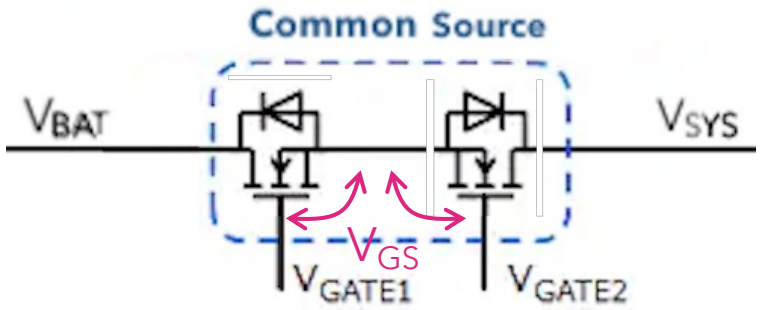

- Can use same control voltage on V_{GATE1} and V_{GATE2}
- Control voltage is relative to node between the FETs

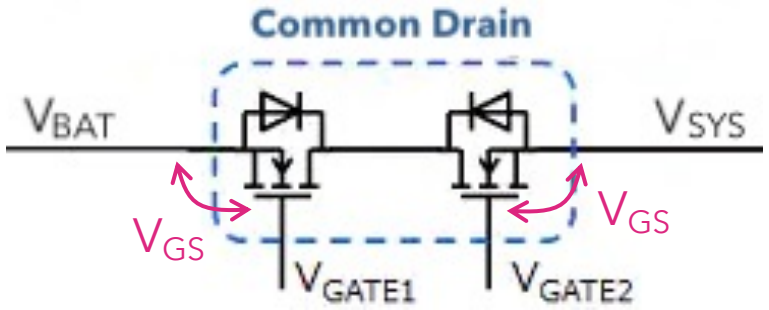

- Need different control voltages on V_{GATE1} and V_{GATE2}

Bonus: "What is a body diode?" video lecture

© Ania Mitros, PhD, 2023

Contactors are tricky to open with current flowing

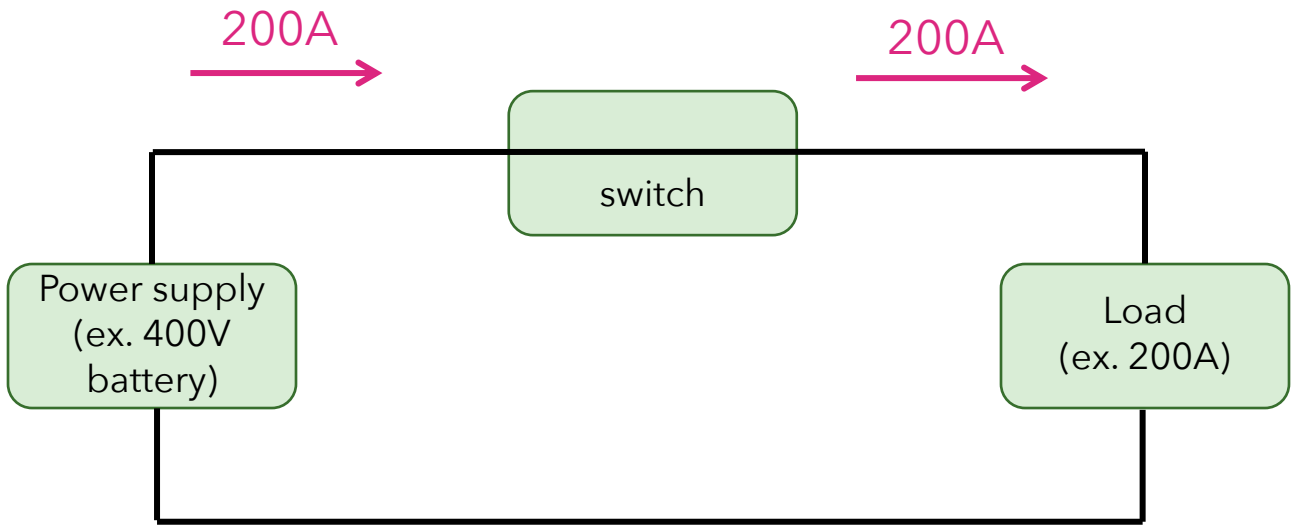

© Ania Mitros, PhD, 2023

Contactors are tricky to open with current flowing

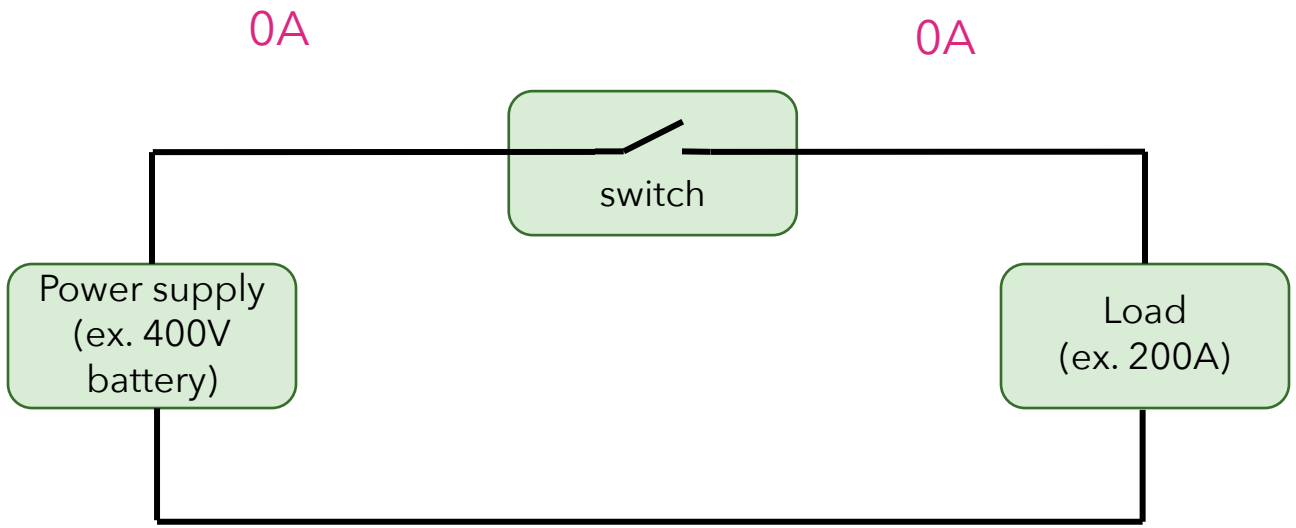

© Ania Mitros, PhD, 2023

Contactors are tricky to open with current flowing

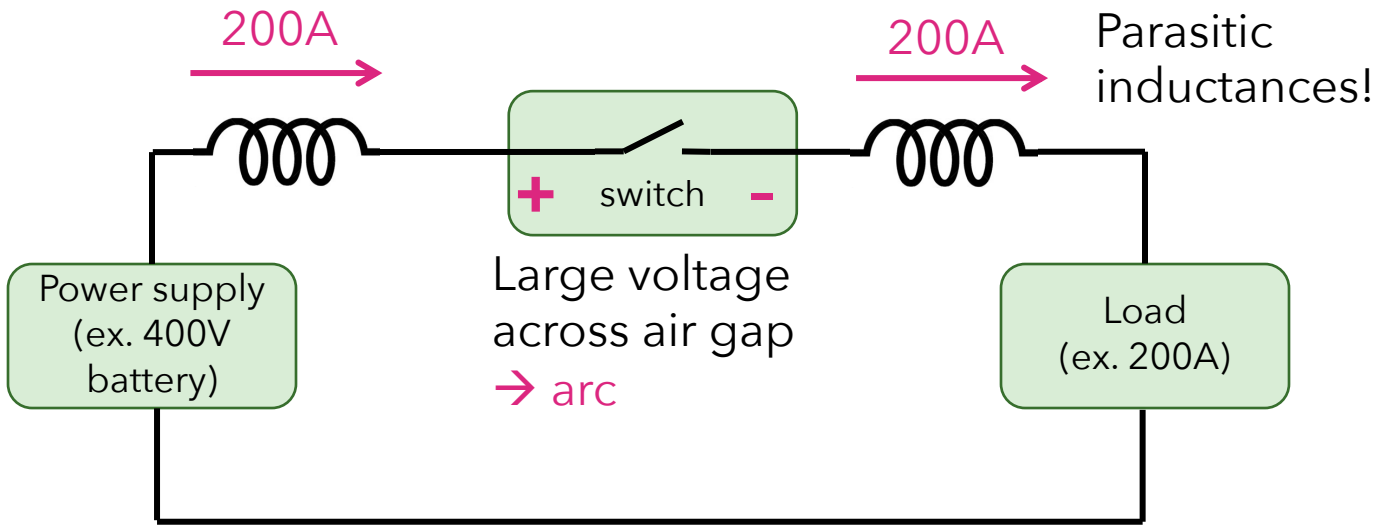

Consequences:

- Surface damage to switch if arc is brief
- Failure to open if arc persists

© Ania Mitros, PhD, 2023

Example: Switch under load

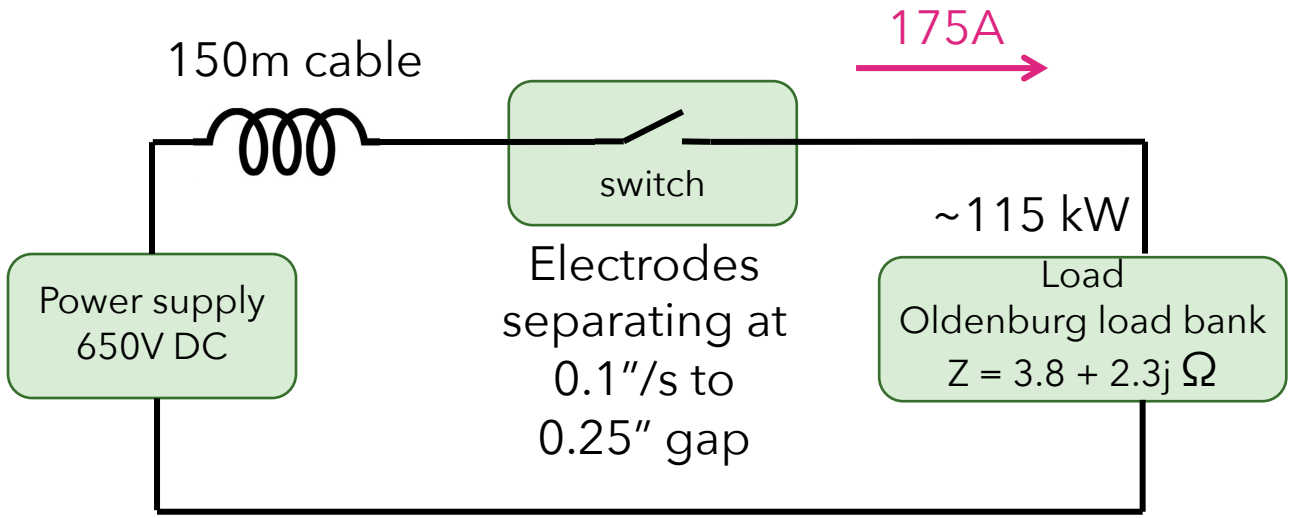

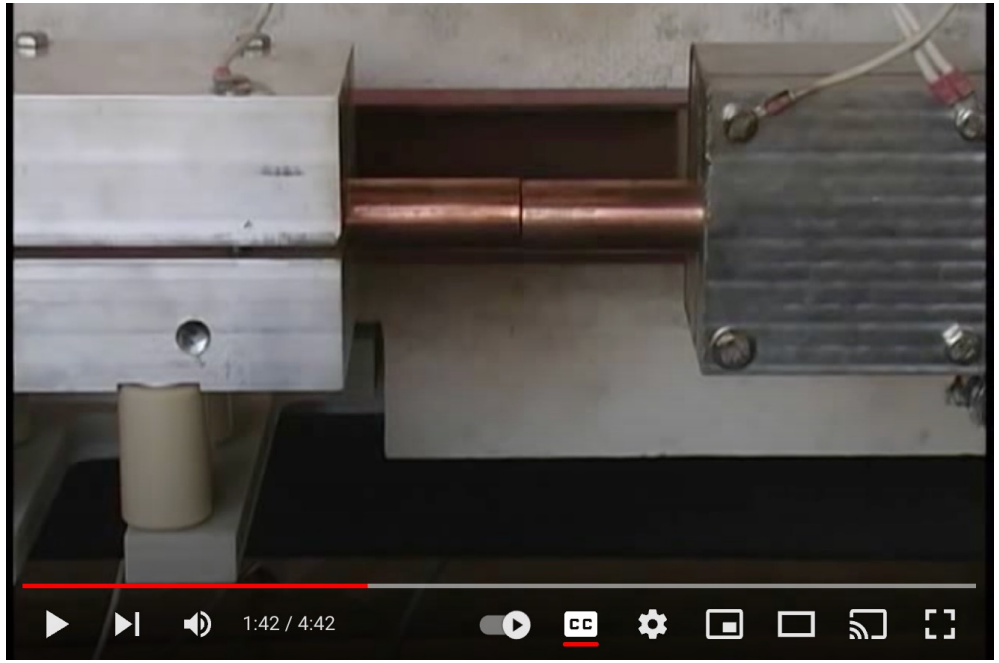

UT Center for Electromechanics (https://www.youtube.com/user/utcem)
https://www.youtube.com/watch?v=HaLSTnJE44o&t=282s

© Ania Mitros, PhD, 2023

Some switch implementation options

Purposes of switch:

- Isolate battery when system is off
- Disconnect battery when fault occurs

Actions:

- Close (zero current)
- Open (zero current) ← Normal power down
- Open (break current) ← Fault response

- Close @ zero current
- Open @ zero current

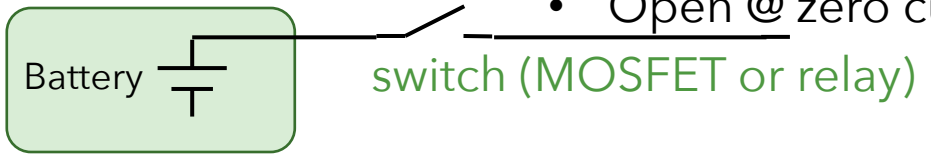

- Contactor can break application typical current
- Fuse breaks high currents

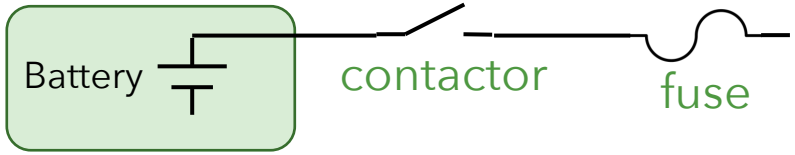

- Switch opens @ zero current
- Pyrofuse breaks fault currents

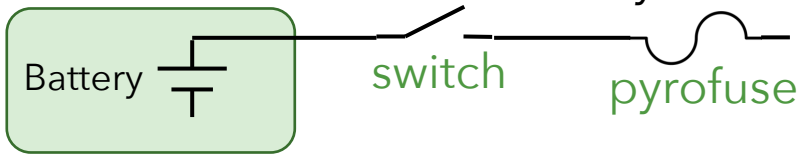

© Ania Mitros, PhD, 2023

Fuse vs pyrofuse

Fuses from Littelfuse

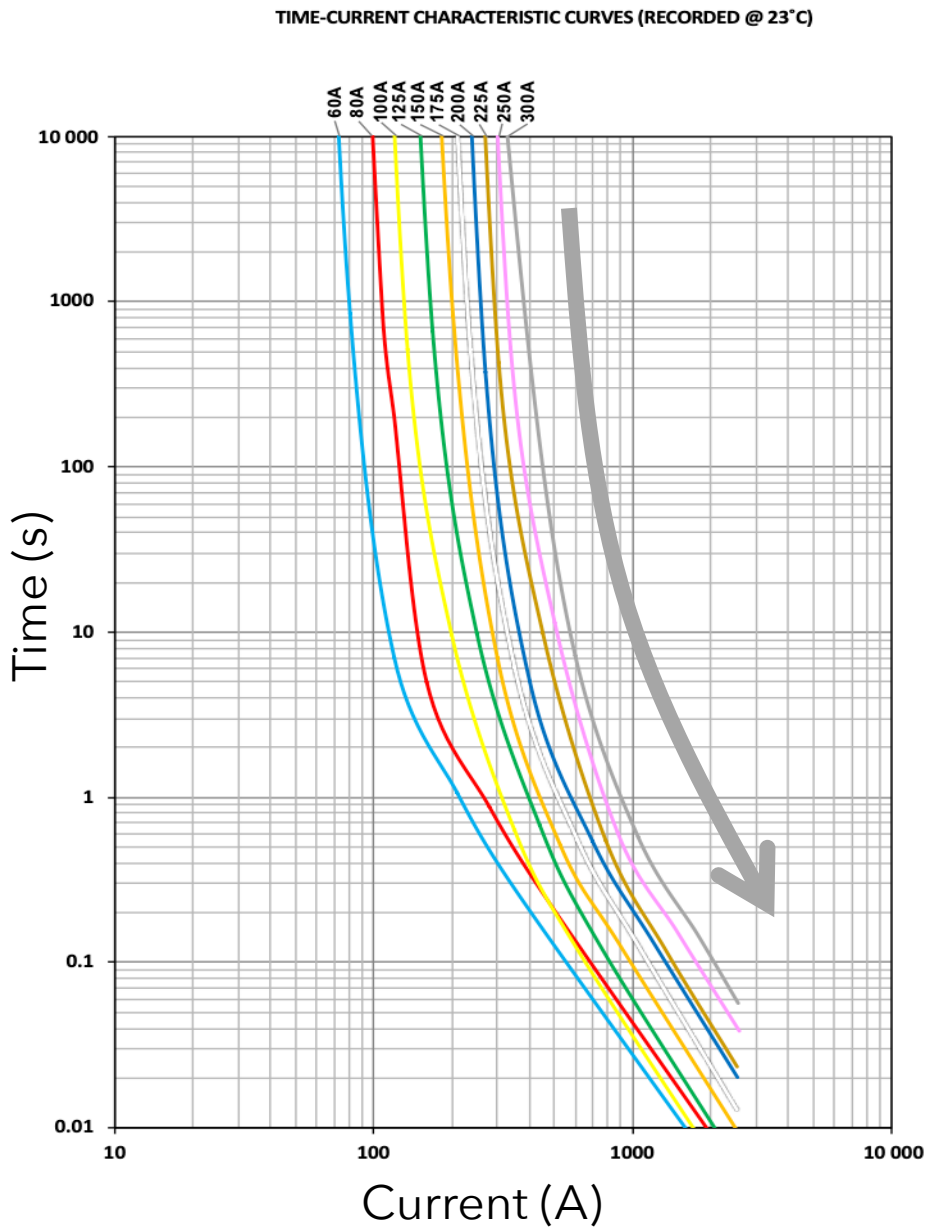

Littelfuse-MEGA-70V-SF51: https://www.littelfuse.com/

Daicel pyrofuse PDD3: https://www.daicel.com/safety/en/pyrofuse/

© Ania Mitros, PhD, 2023

Fuse vs pyrofuse

Fuses from Littelfuse

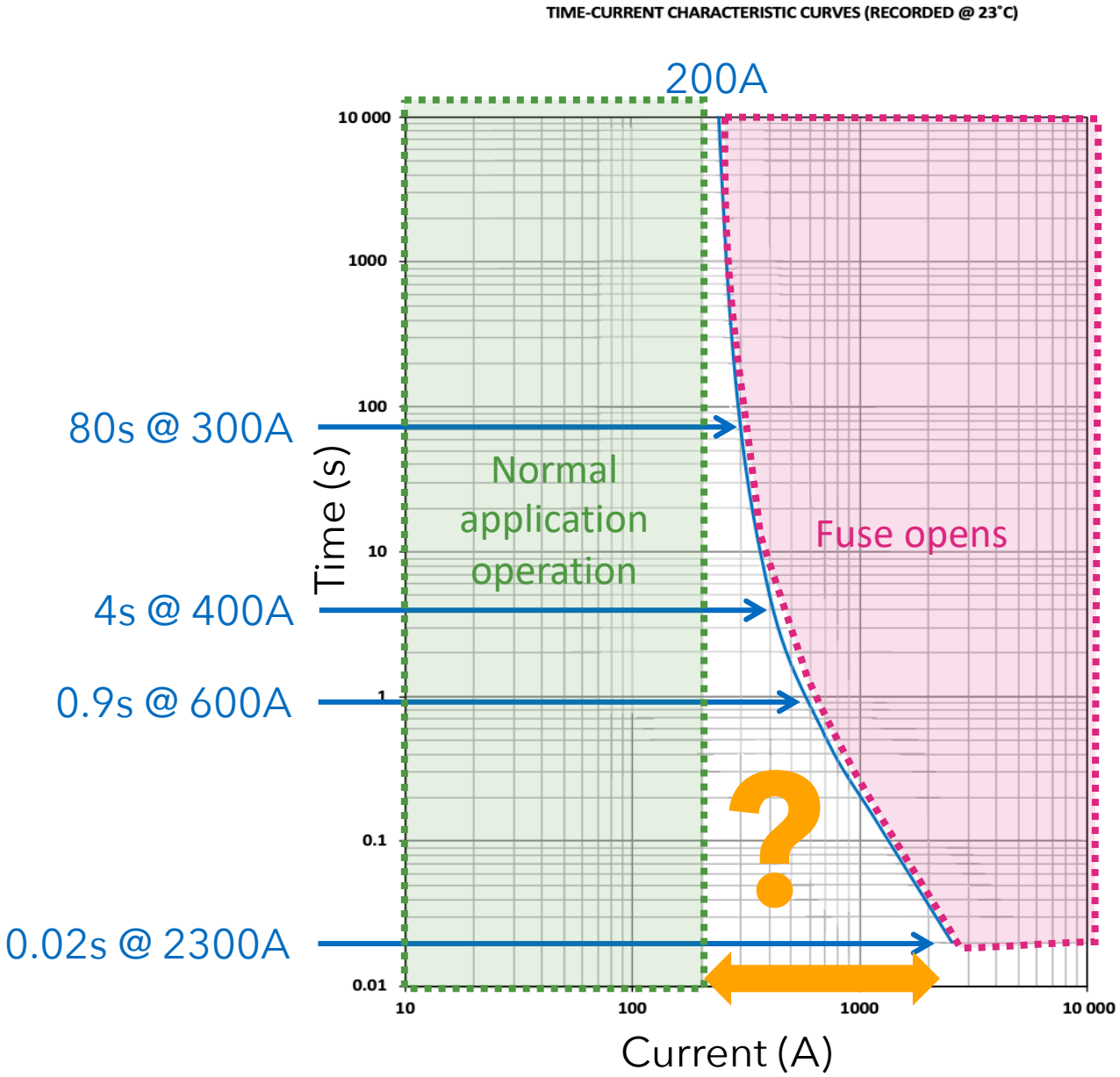

Littelfuse-MEGA-70V-SF51: https://www.littelfuse.com/

Daicel pyrofuse PDD3: https://www.daicel.com/safety/en/pyrofuse/

© Ania Mitros, PhD, 2023

Fuse vs pyrofuse

Fuses from Littelfuse

Pyrofuse from Daicel

control

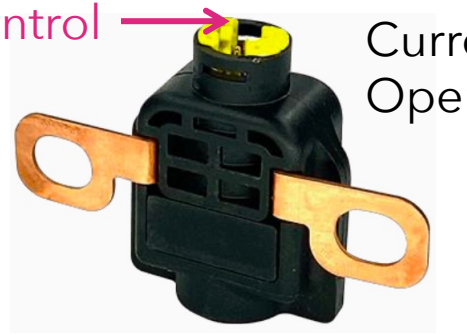

Current: Up to 200A at 85°C
Opening time: <2ms

Littelfuse-MEGA-70V-SF51: https://www.littelfuse.com/
Daicel pyrofuse PDD3: https://www.daicel.com/safety/en/pyrofuse/

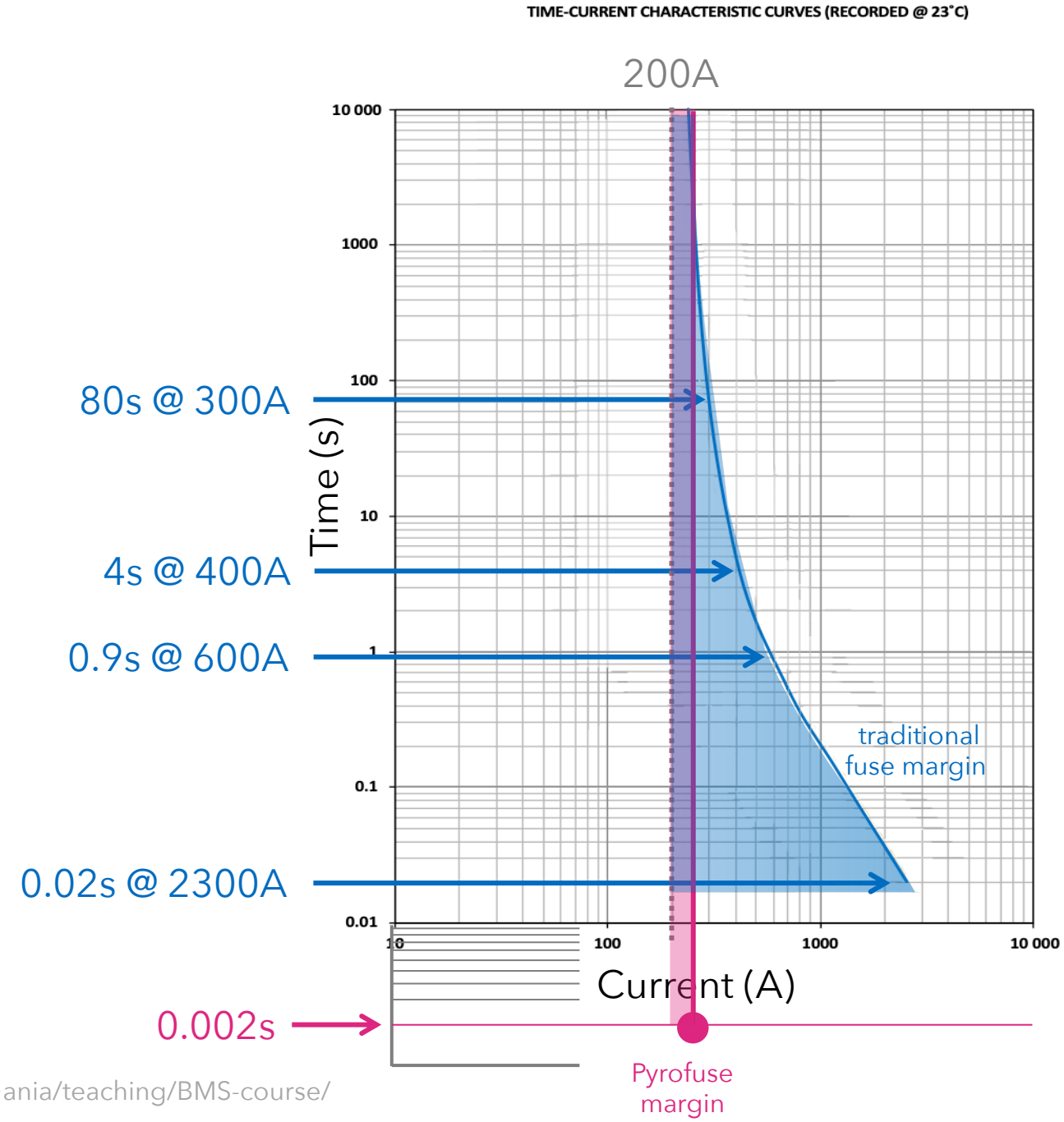

© Ania Mitros, PhD, 2023

Pyrofuse in action

Pyrofuse video (blows at 2:53): https://www.youtube.com/watch?v=nmBdLG40wts

© Ania Mitros, PhD, 2023

Battery switch: Precharge

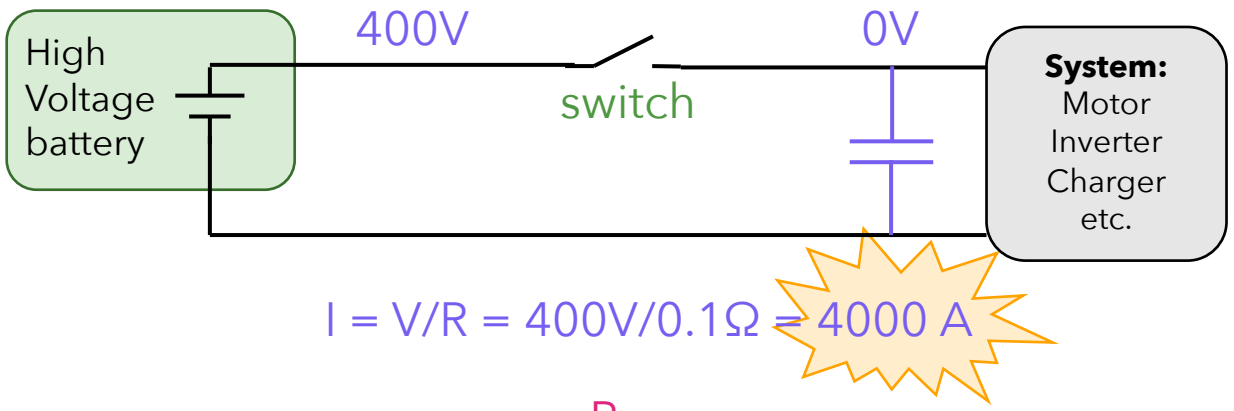

I = V/R = 400V/0.1Ω = 4000 A

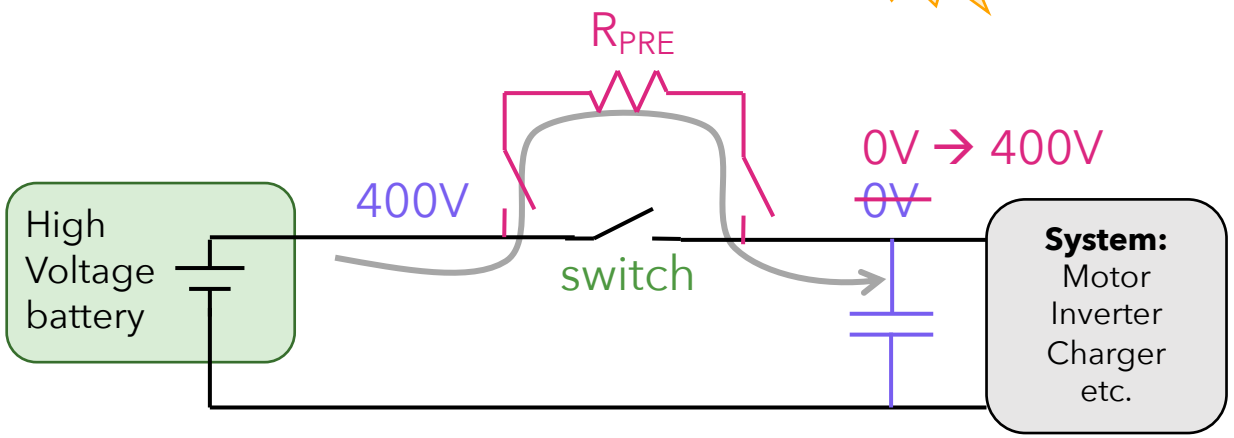

$I = V/R_{PRE} = 400V/2\Omega = 200$ A

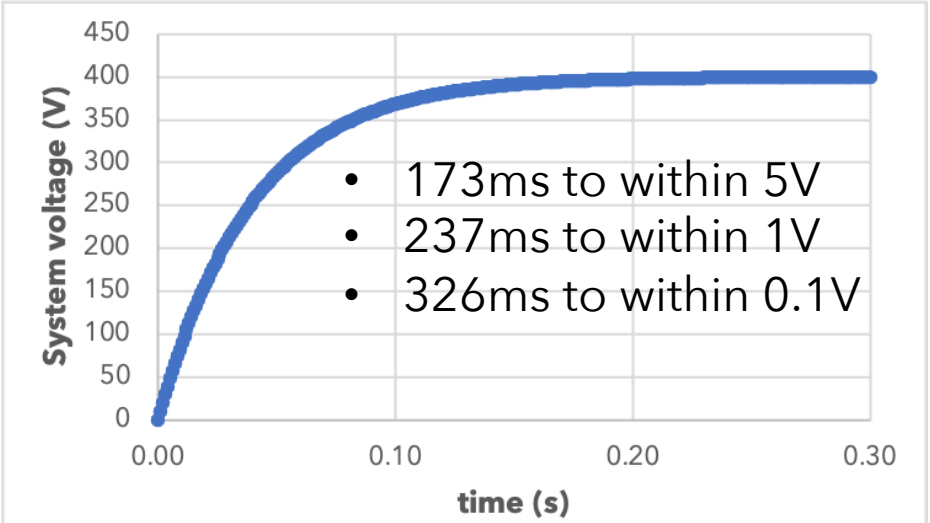

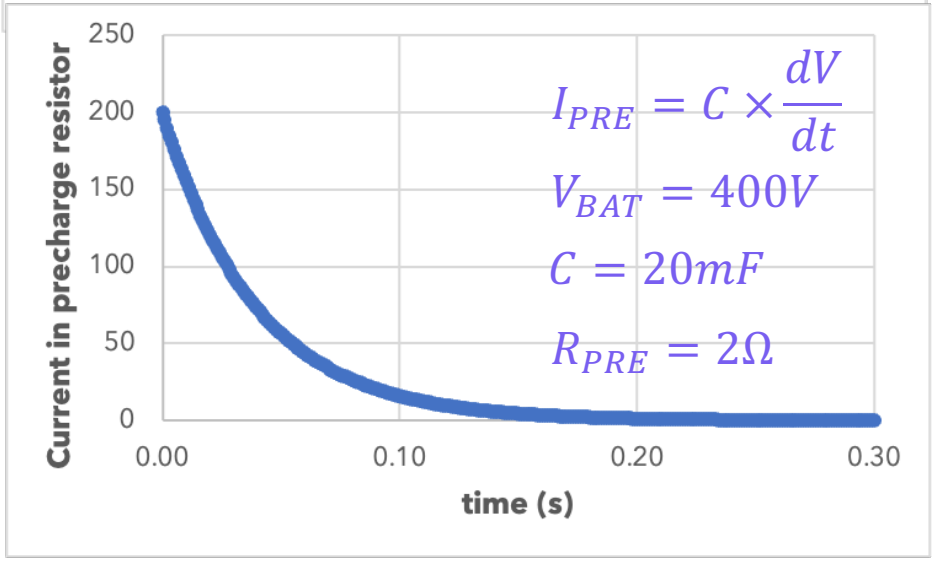

Full system capacitance may be 0.5 to 10 mF, maybe even 25mF.

© Ania Mitros, PhD, 2023

Battery switch: Device location

Pause & Think

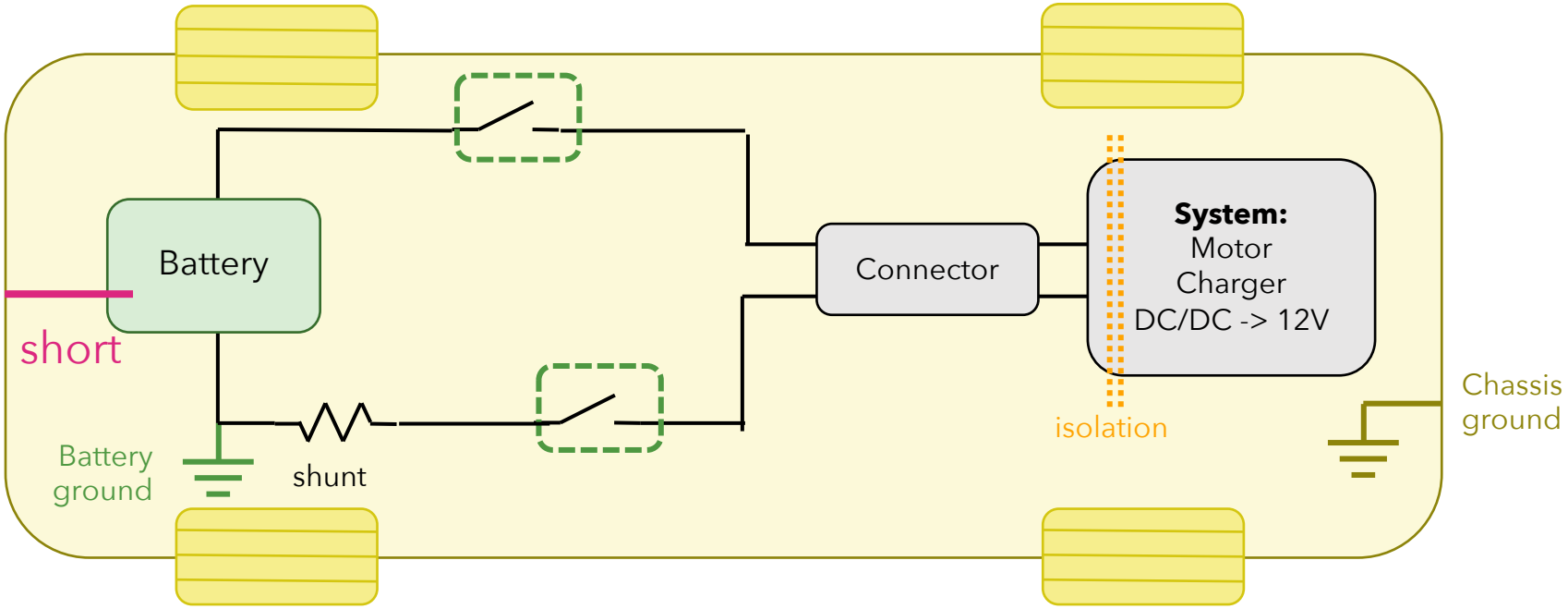

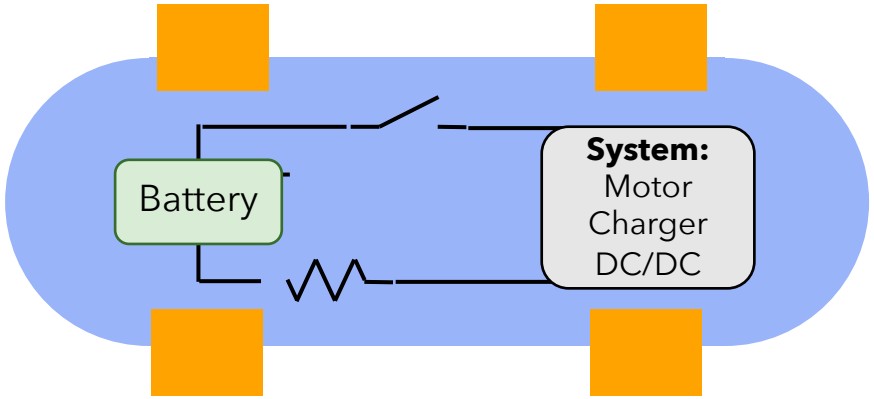

Single switch on top or bottom may be ok.

© Ania Mitros, PhD, 2023

Battery Management System (BMS) functions

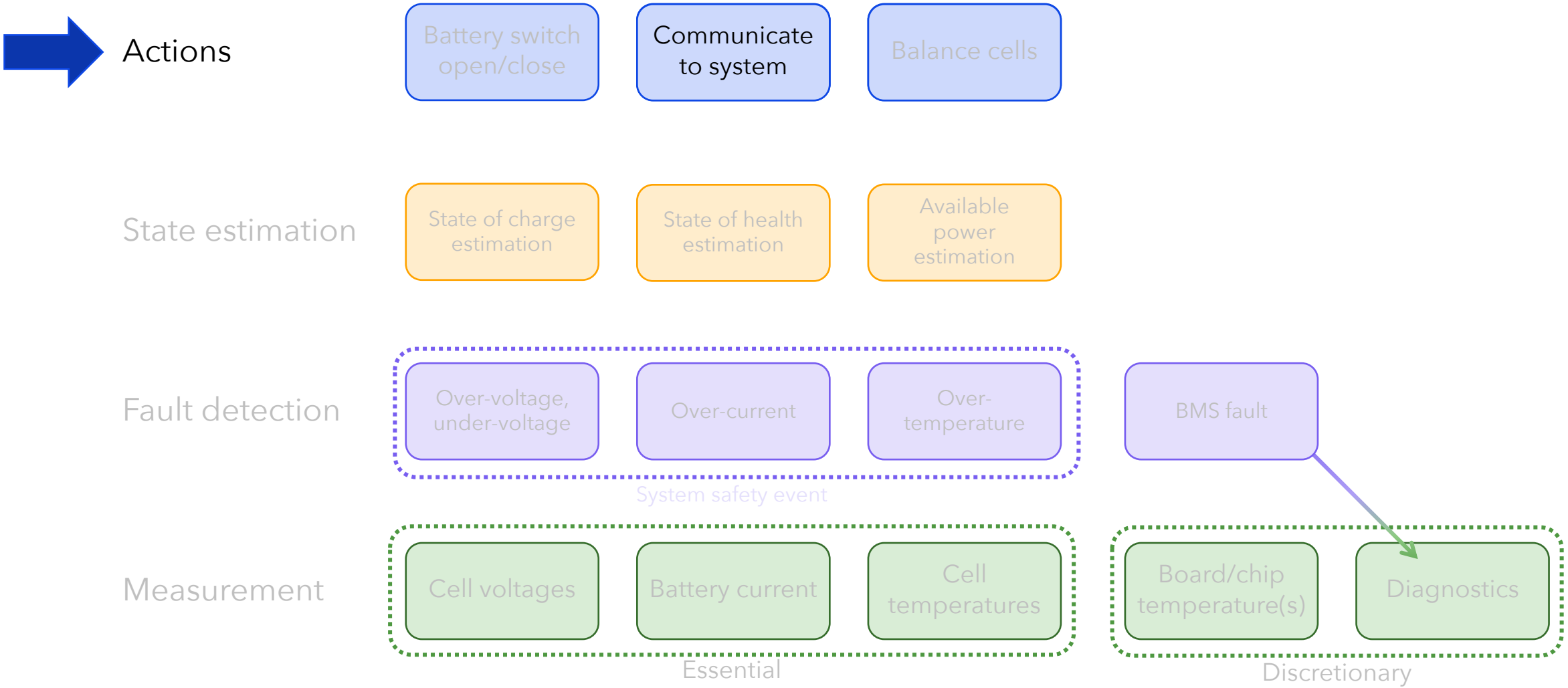

© Ania Mitros, PhD, 2023

https://ofb.net/~ania/teaching/BMS-course/

BEV (Battery Electric Vehicle) architecture

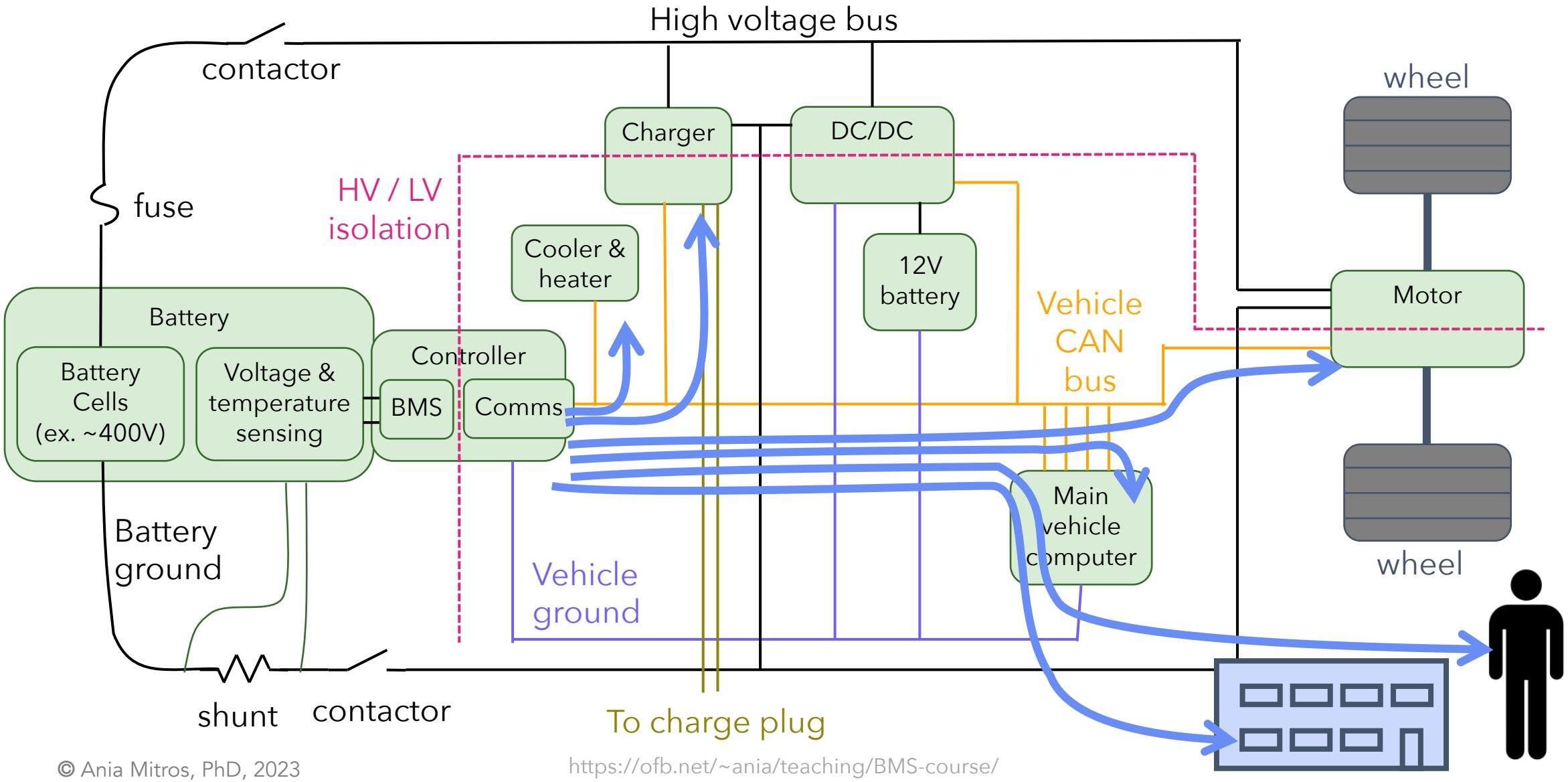

© Ania Mitros, PhD, 2023

https://ofb.net/~ania/teaching/BMS-course/

BMS communications → System actions

The BMS should/may communicate:

- Set charge current
  - To charger
  - Prevent over-voltage, set rate appropriate for temperature
- Set discharge current
  - To loads (motor, other vehicle systems)
  - Prevent under-voltage, set rate appropriate for temperature

← Stationary energy storage: Inverter or DC/DC instead of motor

- Request cooling/heating
  - To cooler & heater
  - Keep cells in optimal range

← Skateboard or small drone may not have a thermal system

- User warnings
- Manufacturer alerts/data

© Ania Mitros, PhD, 2023

Battery Management System (BMS) functions

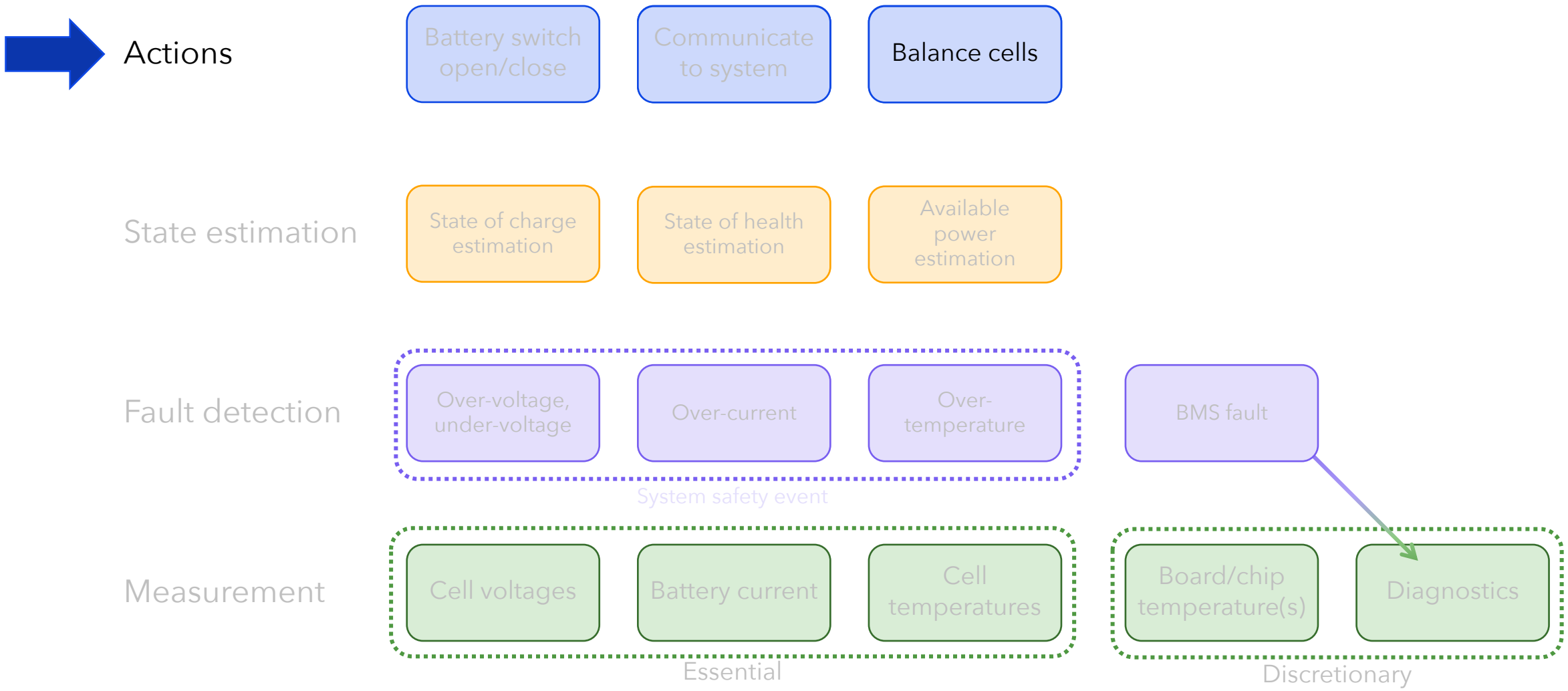

© Ania Mitros, PhD, 2023

https://ofb.net/~ania/teaching/BMS-course/

Cell balancing

Ideal balancing algorithm equalizes all cells' residual charge capacity (Ah to top of charge).

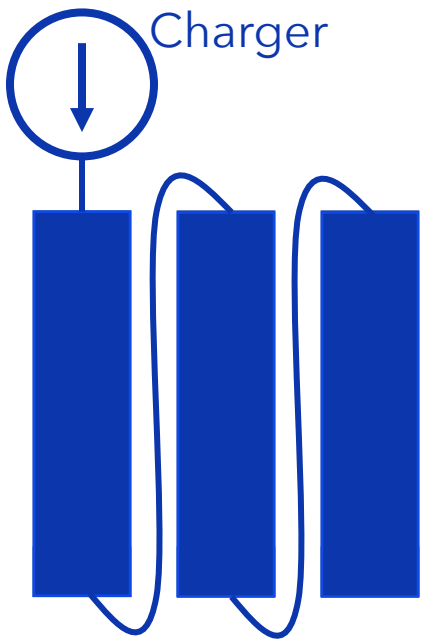

Ideally: All cells reach top of charge together

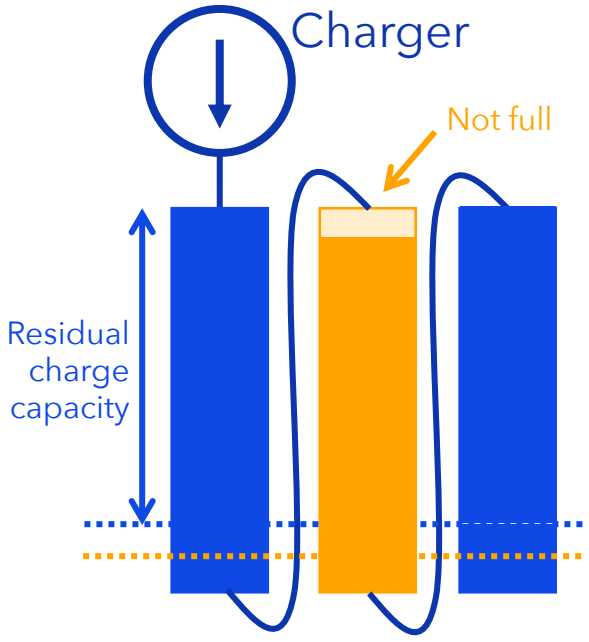

Reality: Without balancing

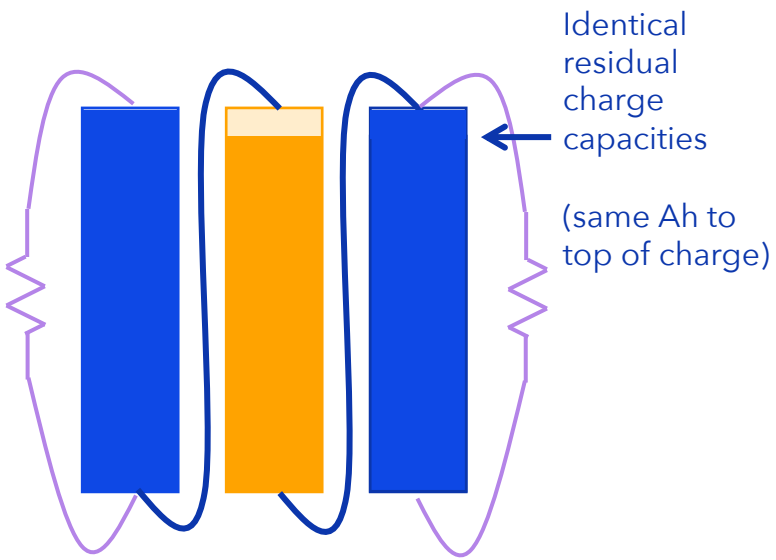

Balancing

© Ania Mitros, PhD, 2023

Reasons for imbalance

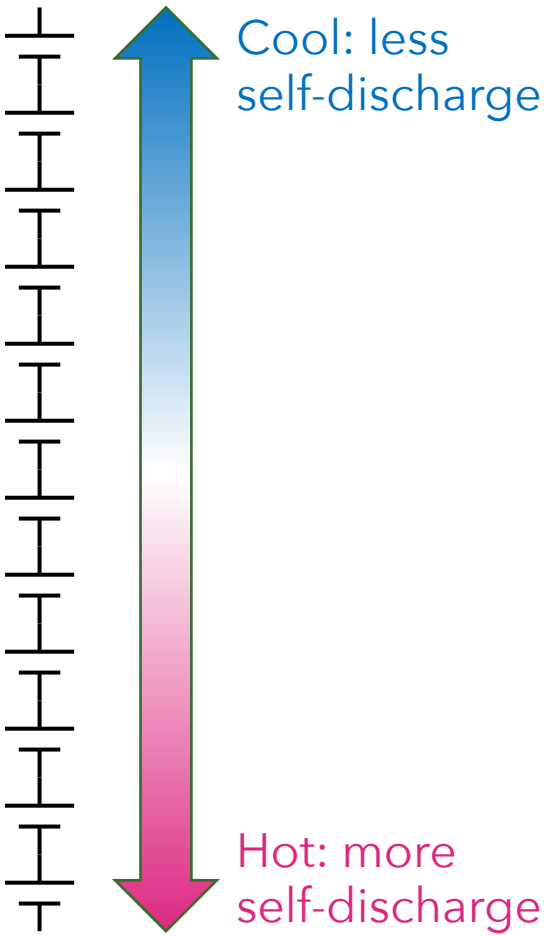

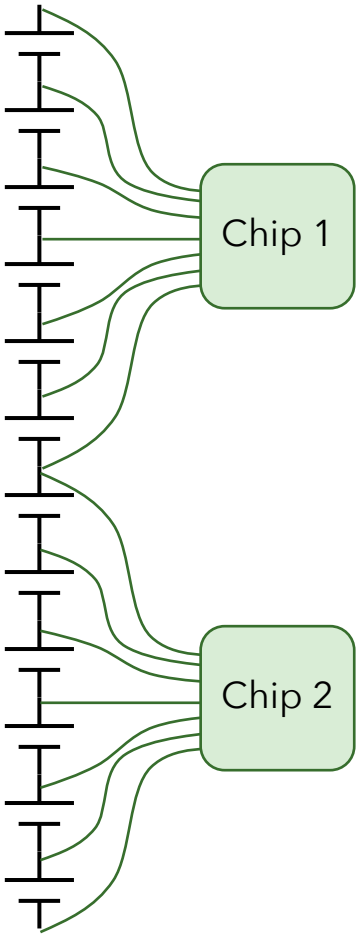

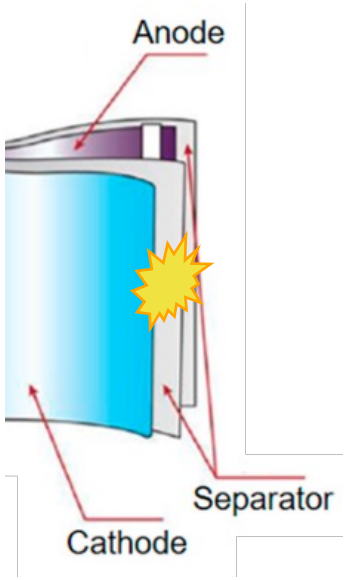

- Self-discharge
- Unequal load
- Faults

© Ania Mitros, PhD, 2023

https://ofb.net/~ania/teaching/BMS-course/

Capacity differences don’t cause imbalance

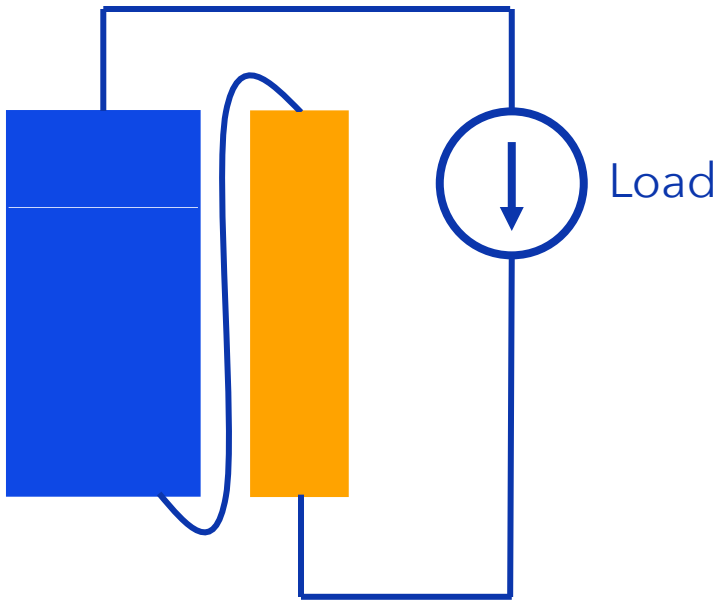

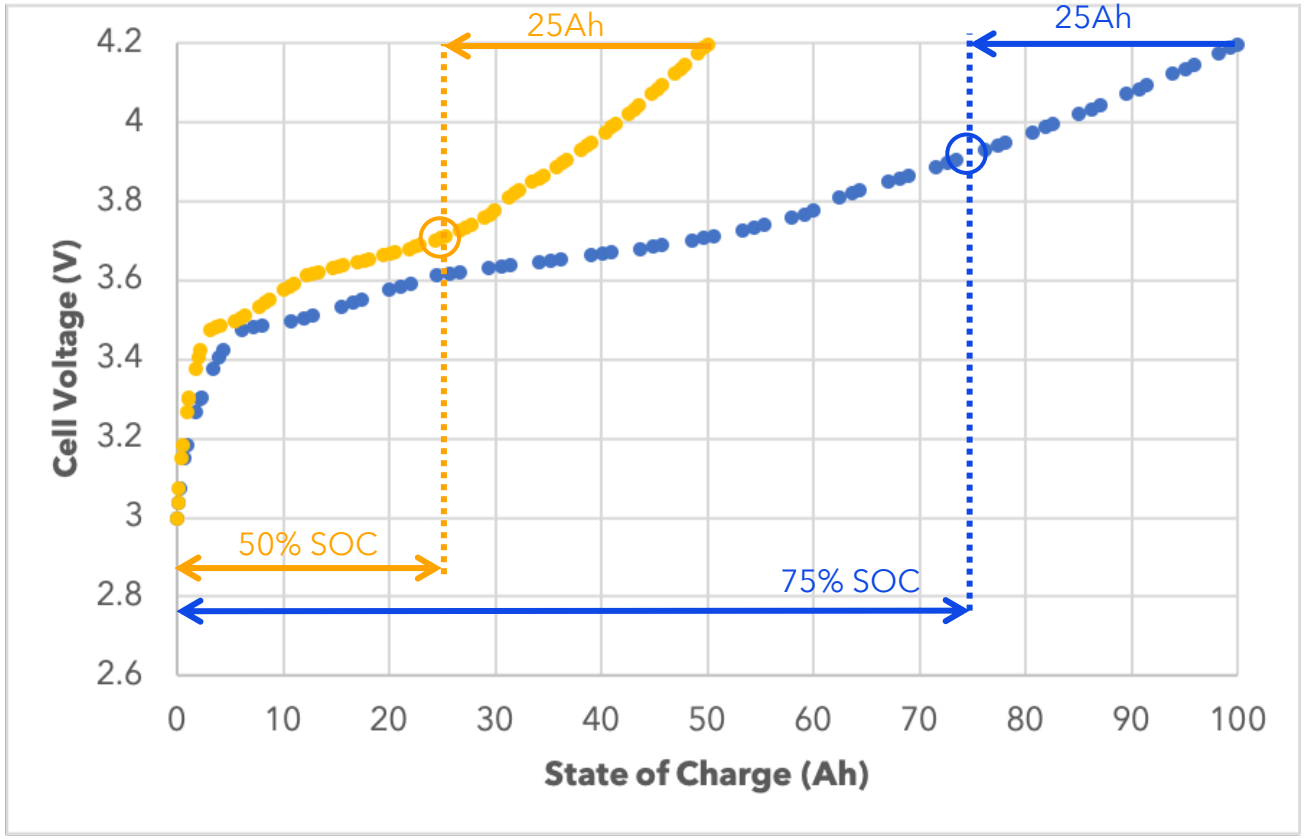

© Ania Mitros, PhD, 2023

Capacity differences don’t cause imbalance

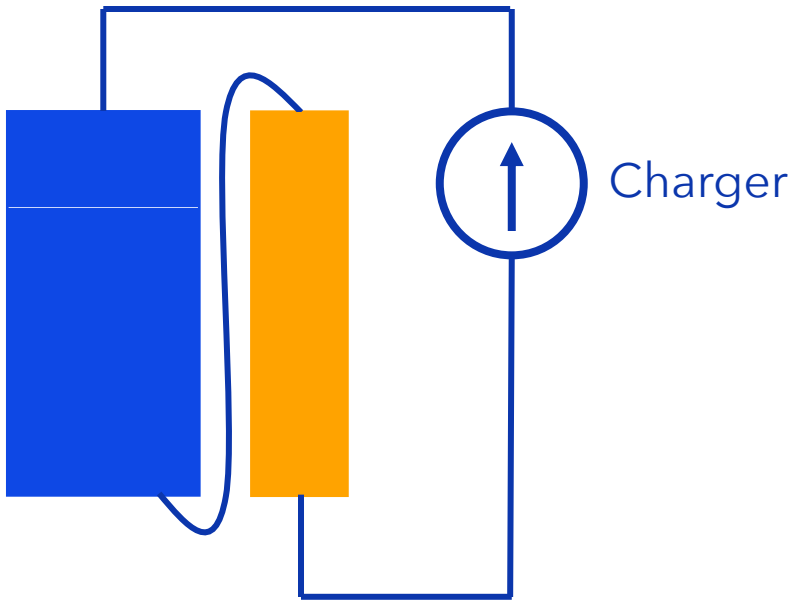

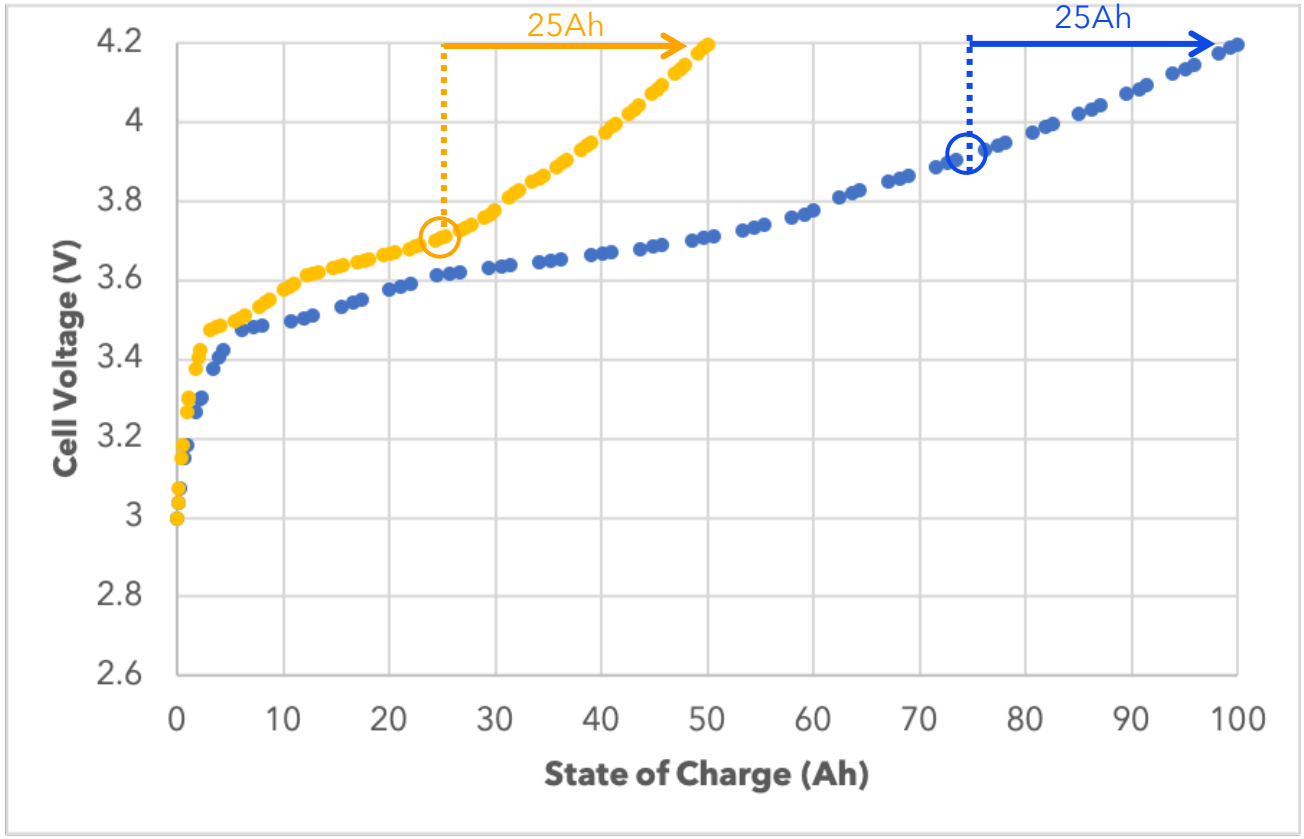

© Ania Mitros, PhD, 2023

Cell self-discharge vs temperature, voltage

Self-discharge at 80% SoC, 25°C:

$$5\mu A \times \left(\frac{200\ Ah}{2.4\ Ah}\right) = 417\mu\text{A}$$ ← Typical

Self-discharge at 100% SoC, 45°C:

$$2 \times 2 \times 21\mu A \times \left(\frac{200\ Ah}{2.4\ Ah}\right) = 7mA$$ ← Worst case

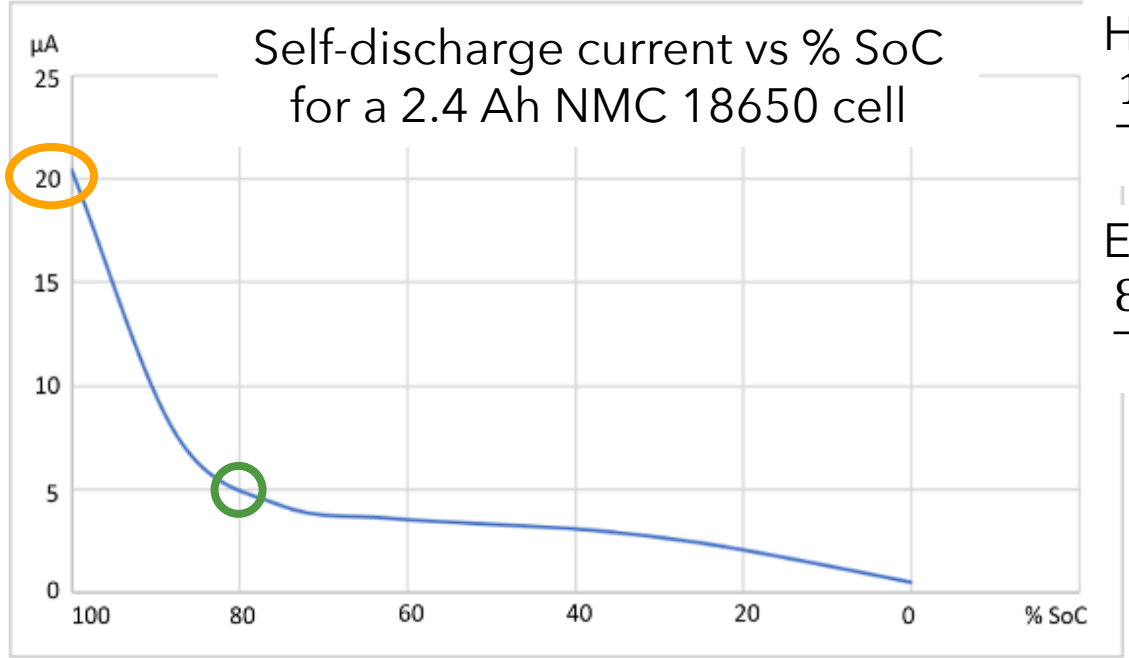

Home energy:

$$\frac{10\ kWh}{50V} = 200\ Ah$$

Electric car:

$$\frac{80\ kWh}{400V} = 200\ Ah$$

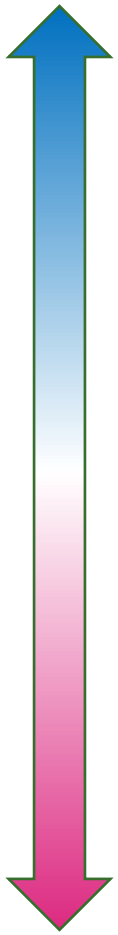

Cool: less self-discharge

"One can expect the self-discharge to typically double for every 10°C rise."

Hot: more self-discharge

From Fig 3 in https://www.batterytechonline.com/testing-and-safety/measuring-lithium-ion-cell-self-discharge

© Ania Mitros, PhD, 2023

Balancing: Perspective

For a 200Ah battery pack:

Self-discharge at 80% SoC, 25°C:

$$5\mu A \times \left(\frac{200\ Ah}{2.4\ Ah}\right) = 417\mu A \quad \leftarrow \text{Typical}$$

Self-discharge at 100% SoC, 45°C:

$$2 \times 2 \times 21\mu A \times \left(\frac{200\ Ah}{2.4\ Ah}\right) = 7mA \quad \leftarrow \text{Worst case}$$

Plausible system currents:

- 1500 A peak current (7.5C) for peak acceleration
- 200 A continuous current (1C)
- Tesla Sentry mode: $I = \frac{250W}{400V} = 625mA$ from 400V battery
- Headlights: $I = \frac{70W}{400V} = 175mA$ from 400V battery
- 1 W MCU: $I = \frac{1W}{50V} = 20mA$ from a 50V battery

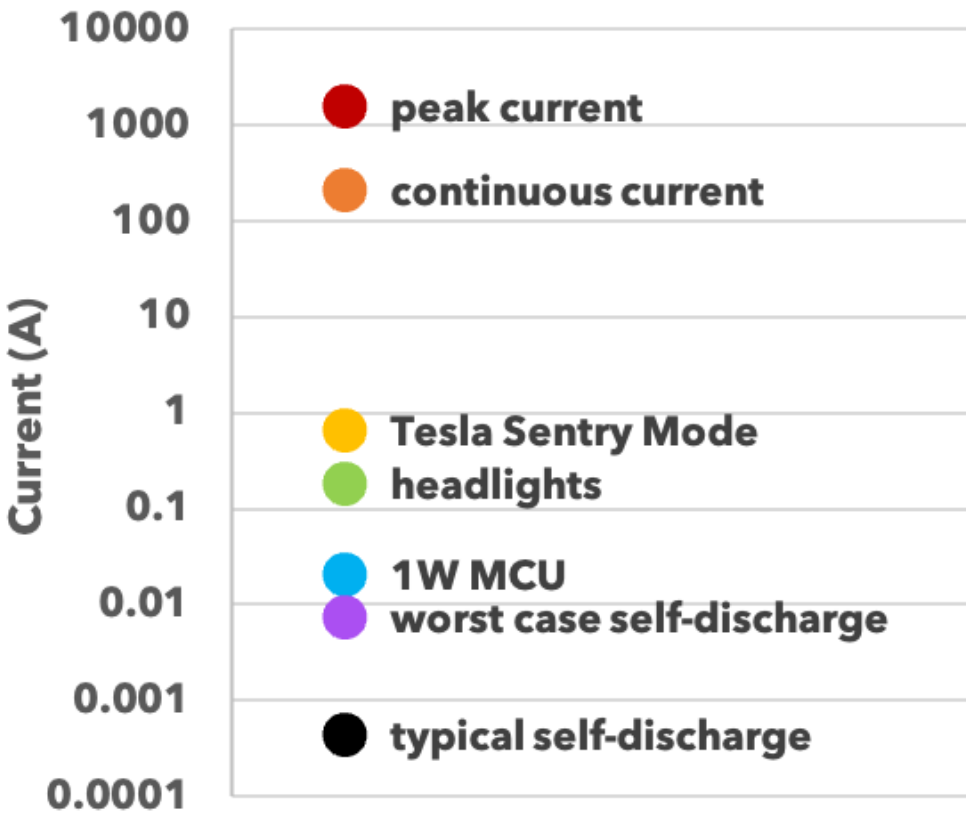

© Ania Mitros, PhD, 2023

Active balancing

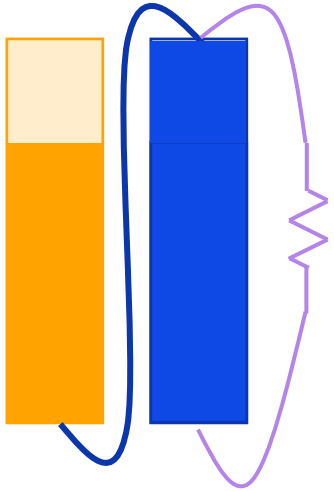

Passive Balancing

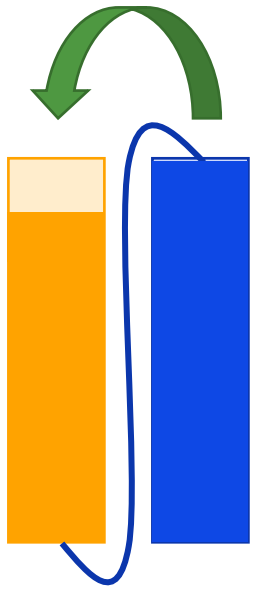

Active Balancing

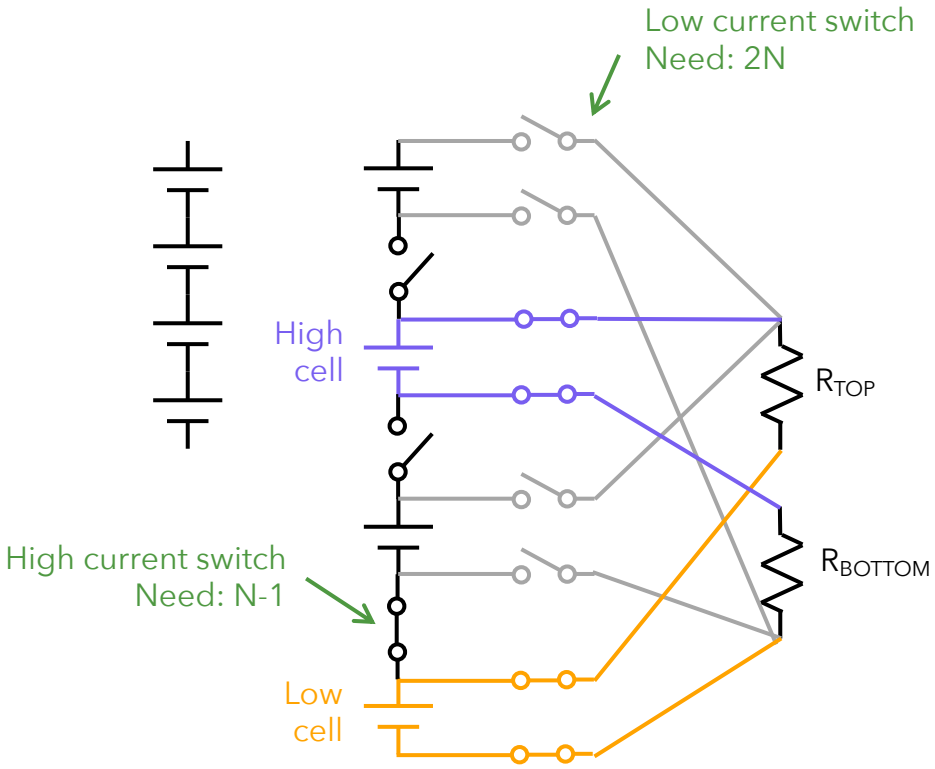

Active Balancing: Switches

Exercise: Estimate the cost

- 12-14 cells (stationary storage)
- 100 series cells (automotive)

© Ania Mitros, PhD, 2023

Active balancing with storage elements

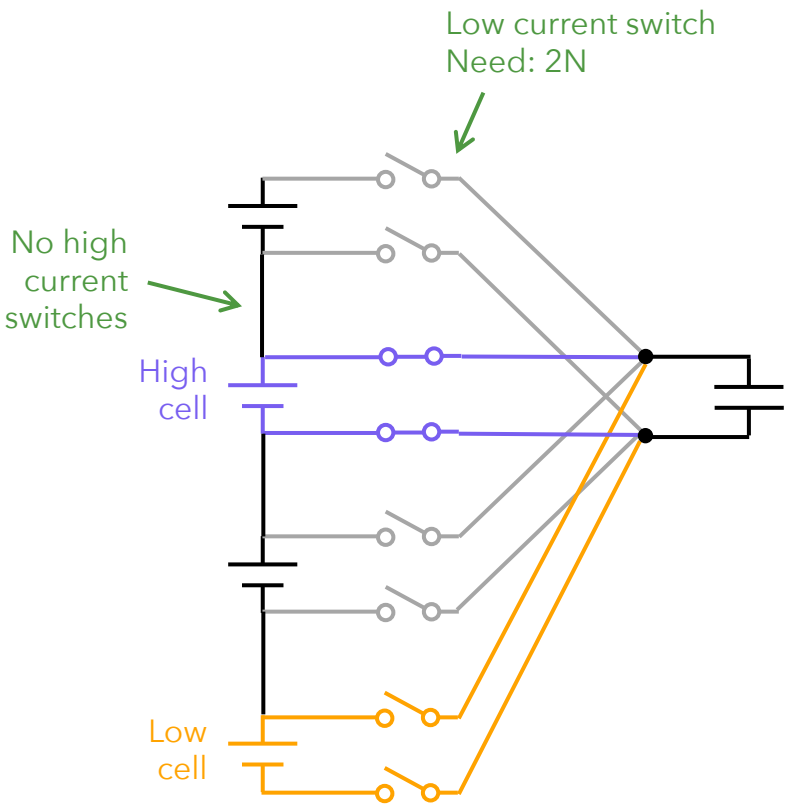

Storage element:
- Capacitor
- Inductor versions are possible

Active Balancing: Storage elements

Further resources:
→ Switching frequency allows control of current. Look up "switched capacitor circuit" for details.
→ Active cell balancing with inductors: https://www.nxp.com/docs/en/application-note/AN4428.pdf
→ Active cell balancing with transformers: https://www.analog.com/en/technical-articles/active-battery-cell-balancing.html

© Ania Mitros, PhD, 2023

Active balancing: Switch control

How to control all these switches?

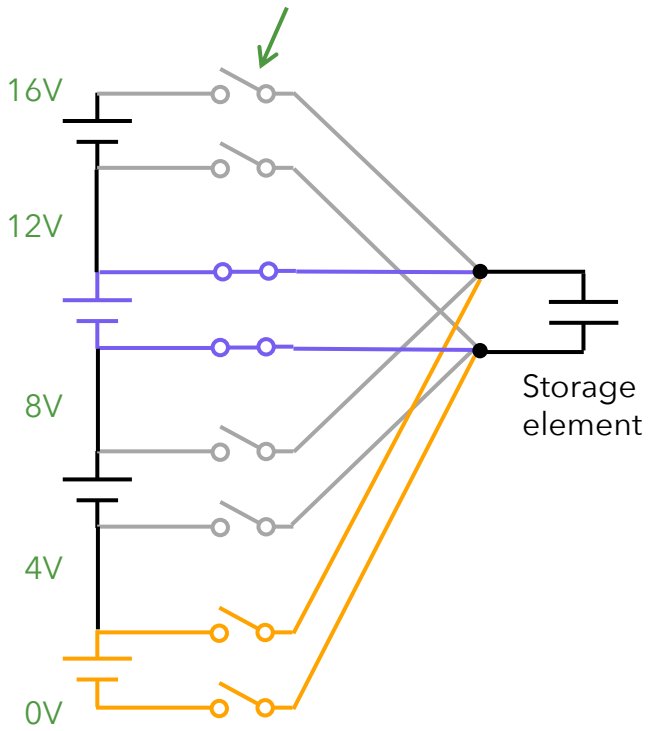

Relay

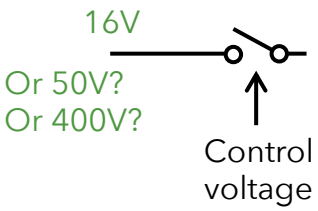

FET (Solid State)

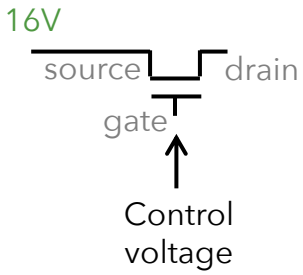

FET control
On: $V_{GATE} > V_{SOURCE} + V_{th}$
Off: $V_{GATE} = V_{SOURCE}$

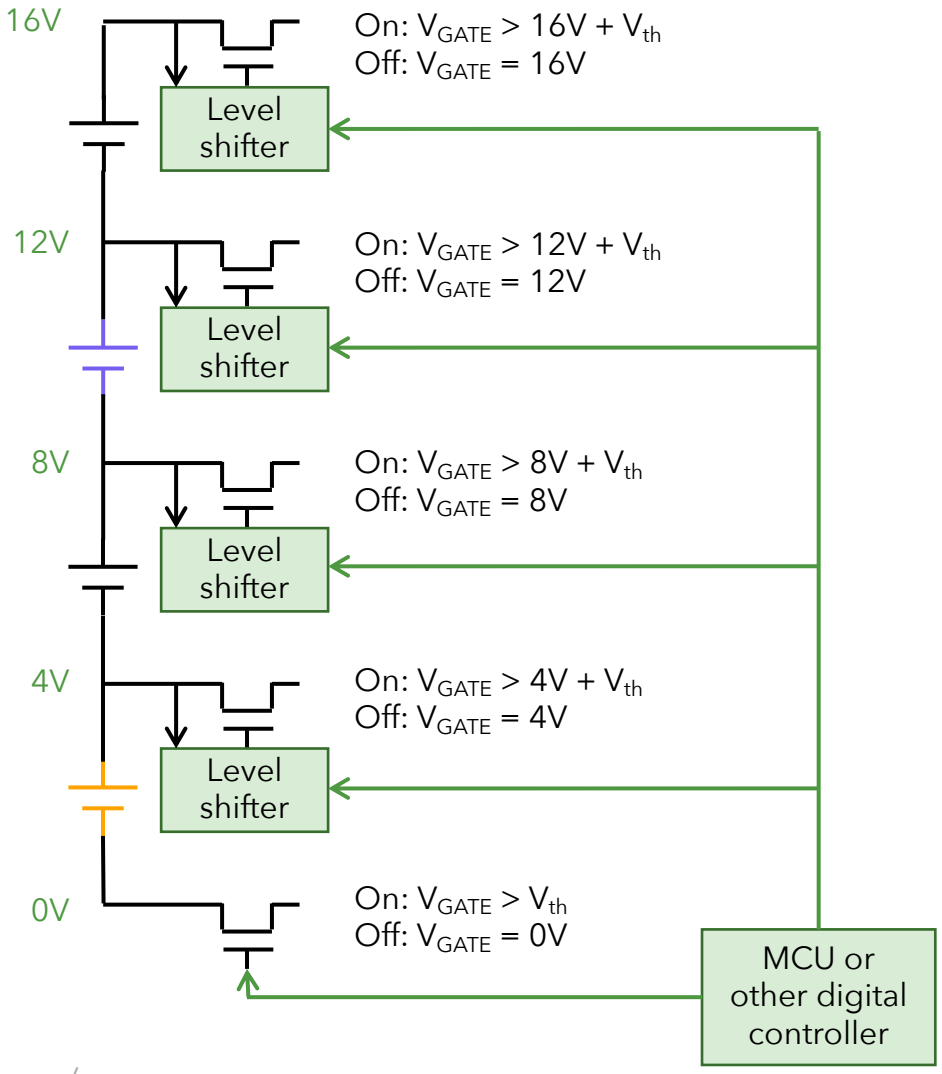

© Ania Mitros, PhD, 2023

Balancing: Practical considerations

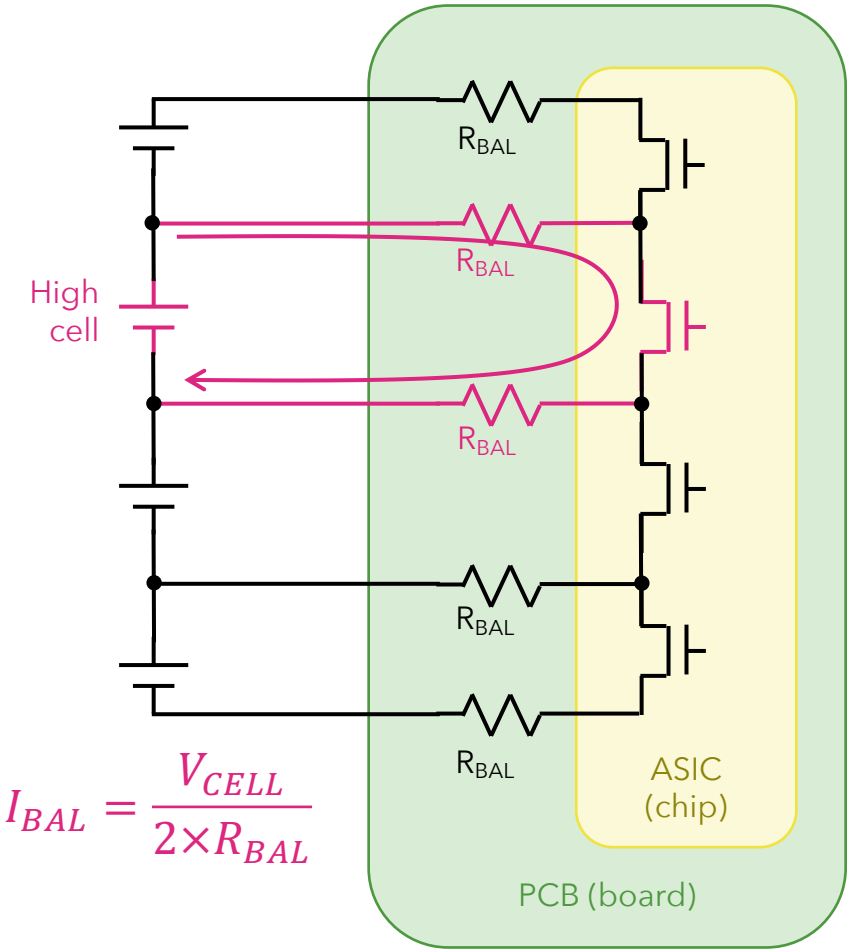

$$I_{BAL} = \frac{V_{CELL}}{2 \times R_{BAL}}$$

$$I_{BAL} = (7mA\ worst\ case\ current) \times \frac{24\ hours}{1\ hour} = 168mA$$

$$P_{BAL} = \frac{V_{CELL} \times I_{BAL}}{2} = \frac{(4V) \times (168mA)}{2} = 0.336W$$

SMD resistor power ratings

Size	Power
0603	0.0625 W
0805	0.1 W
1206	0.125 W
1210	0.25 W
2512	0.50 W

Unlikely to meet reliability requirements

Solutions:

- Smaller balancing current
- Careful thermal design and series resistors

© Ania Mitros, PhD, 2023

Balancing and cell voltage measurement

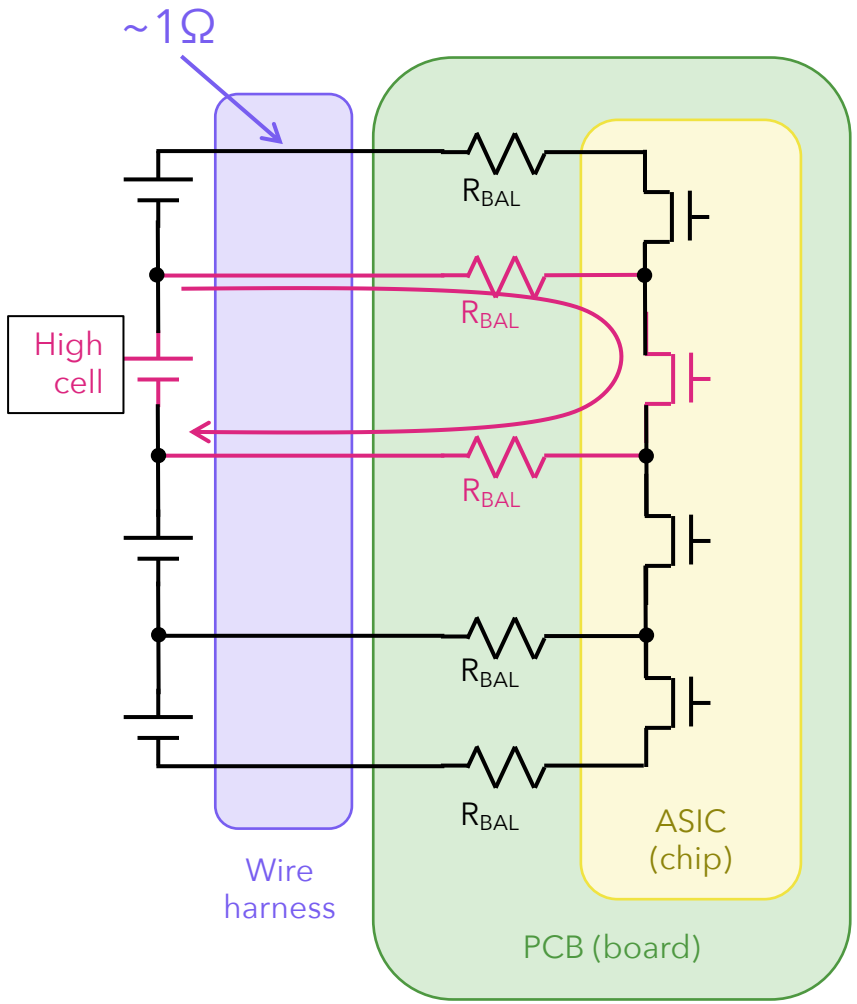

During measurement only:

$$V_{ERR} = (5\mu A)\times(1\Omega) = 5\mu\text{V}$$

With balancing on:

$$R_{BAL} = \frac{1}{2}\times\frac{V_{CELL}}{I_{BAL}} = \frac{1}{2}\times\frac{4V}{20mA} = 200\Omega$$

$$V_{ERR} = (20mA)\times 2\times(1\Omega) = 20m\text{V}$$

Dual harness:

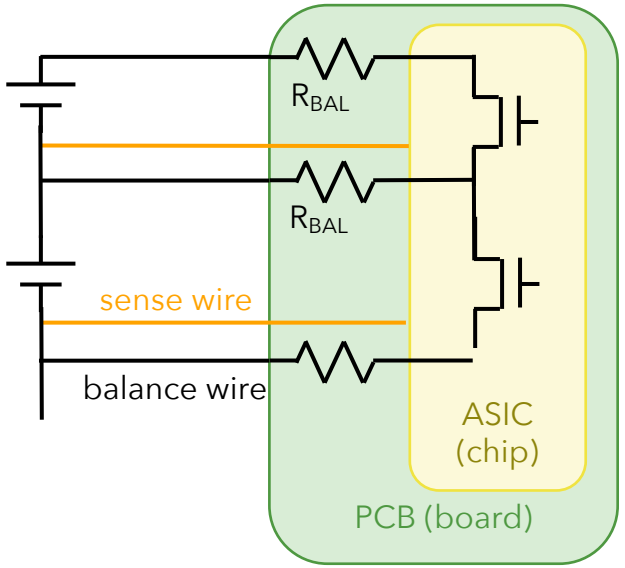

Interleaving:

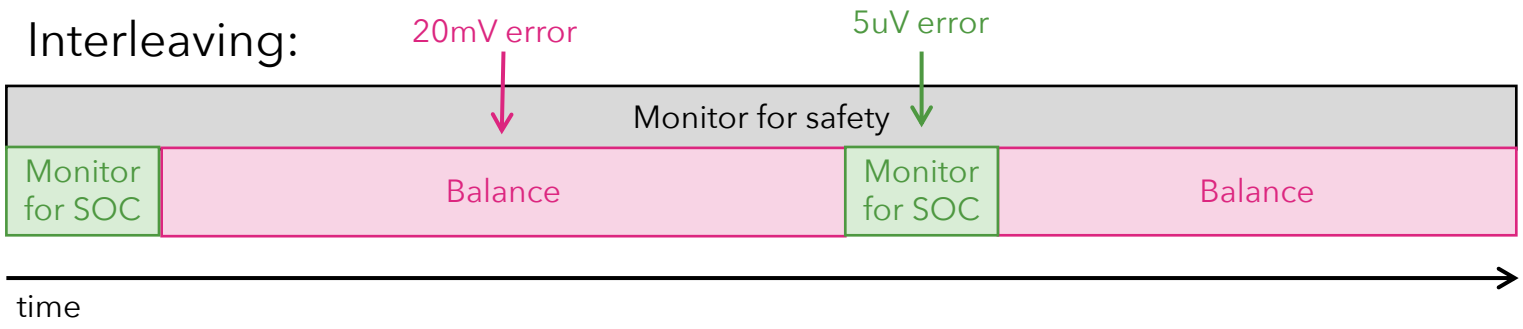

© Ania Mitros, PhD, 2023

https://ofb.net/~ania/teaching/BMS-course/

Balancing: Summary

- Equalizes cells' voltage or state of charge
  - Ideally: equalizes residual charge capacity (Ah to top of charge)
- Compensates for unequal discharge
  - Self-discharge
  - Unequal loads
- Passive balancing is most common
  - Wastes energy
  - Simple, inexpensive circuit
- Active balancing
  - Conserves energy
- Balancing may impact cell voltage measurement
  - Can interleave measurements with balancing

Technically: This is "top balancing".

© Ania Mitros, PhD, 2023

© Ania Mitros, PhD, 2023

https://ofb.net/~ania/teaching/BMS-course/

"The End" by Gerd Altmann from Pixabay